Appendix A Pre-Lodgement Information Provision Detail

1 Pre-lodgement information provision detail

1.1 Commonwealth Government

SA Water has undertaken a self-assessment and forwarded to the DCCEEW as due diligence. The proposed works are not expected to trigger a controlled action as a result of significant impact(s) to MNES.

1.2 State Government Agencies (Referral Bodies)

Throughout the planning and design process, SA Water has proactively engaged with many of State Government agencies, expected to act as referral bodies during the development assessment process. These include:

- Coast Protection Board (CPB)
- Native Vegetation Council (NVC)
- South Australian Environment Protection Authority (EPA)
- South Australian Country Fire Service (CFS)
- Department for Environment and Water (DEW).

1.3 State Government Agencies (Pre-lodgement Working Group)

SA Water assembled a pre-lodgement working group, comprised of the following State Government agencies:

- South Australian Environment Protection Authority (EPA)
- Department for Trade and Investment, Planning and Land Use Services (via PLUS)
- Department for Environment and Water (DEW)
- Department for Health & Wellbeing (DHW)
- Department of Primary Industries and Regions, South Australia (PIRSA)
- Department for Infrastructure & Transport (DIT).

1.4 Eyre Peninsula Local Government Area

SA Water has maintained frequent and ongoing engagement with all local Councils across the Eyre Peninsula whose residents fall within SA Water's Eyre Peninsula network. Of particular focus has been engagement with Councils most impacted by the Project, including the City of Port Lincoln and the District Council of Lower Eyre Peninsula.

Following the announcement of Billy Lights Point as the site for the Project in March 2023, deputations were made to the following Councils:

- District Council of Lower Eyre Peninsula – Wednesday 15 March 2023
- City of Port Lincoln (PLCC) – Tuesday 4 April 2023
- District Council of Tumby Bay – Tuesday 11 April 2023
- District Council of Kimba – Wednesday 12 April 2023
- District Council of Elliston – Tuesday 18 April 2023
- District Council of Wudinna – Tuesday 18 April 2023
- District Council of Franklin Harbor – Wednesday 10 May 2023
- District Council of Cleve – Tuesday 16 May 2023
- District Council of Streaky Bay – Tuesday 16 May 2023
- District Council of Ceduna – Wednesday 17 May 2023.

The purpose of these deputations was to advise local government following the announcement of the Project site and to provide the reasoning behind the decision to remain at Billy Lights Point.

Generally, most Councils received the update positively, and indicated that water security and water quality were of primary concern to the Eyre Peninsula community. A commitment was made by SA Water to keep them informed as the design progressed, and to advise them of any upcoming engagement activities and opportunities.

1.5 City of Port Lincoln and Lower Eyre Peninsula Council

The proposed development is within the City of Port Lincoln and the Lower Eyre Peninsula Council areas and a referral is expected to be made for a response (under Section 131(6) of the PDI Act).

Elected Members

Additional engagement occurred with Elected Members from the City of Port Lincoln throughout 2023 and will continue as the Project progresses. To date, the following formal engagement activities have taken place:

- Wednesday 15 July 2023: SARDI presented the findings of the far-field modelling to Council elected members
- Monday 20 November 2023: Project update presented to elected members following ECI contractor being awarded.

Executive

In 2023, the City of Port Lincoln saw several changes in the role of their CEO, which resulted in a period of time with two different interim CEOs. SA Water ensured that information was shared with the respective interim CEOs throughout this period and as of 18 January 2024, has now met with the newly appointed City of Port Lincoln CEO.

Technical working group

A Technical Working Group (TWG) with the City of Port Lincoln was formed to address land use, transport and stormwater matters in the development assessment process.

The TWG met twice during the latter half of 2023; including an initial meeting to begin considering Project impacts and opportunities and a second meeting on site to understand the footprint and interface of the Project with the surrounding landscape. Another meeting occurred on Wednesday 17th April 2024 to update Council staff on the current design and seek feedback for incorporation into this development application.

SA Water made a commitment to meet with the TWG prior to lodgement of the development application, to foster transparency and ongoing opportunities through the Project.

Key issues raised by Council through the TWG include:

- Provision of the Western Link Road outlined in the Proper Bay Concept Plan within the P&D Code.
- Potential traffic impacts along St. Andrews Drive.
- A request for the upgrade and use of Greyhound Road as a preferred route, rather than St. Andrews Drive.
- Potential noise impacts generated by the desalination plant and associated infrastructure.
- Potential visual amenity impacts surrounding the desalination plant.

In response to comments raised by Council, WSP Australia Pty Limited (WSP) on behalf of SA Water consulted with Council during the development of the Traffic Impact Assessment (TIA) for the Project (see Appendix F of the Development Application Report), seeking location knowledge regarding areas of concern within road network at Port Lincoln. This information was used as input to guide the assessment and recommendations; which will ultimately feed into the final route selection.

1.6 Local First Nations

SA Water have been in contact with the following groups:

- Barngarla Aboriginal Determination Corporation (BDAC)
- Nauo Aboriginal Corporation (NAC)
- Port Lincoln Aboriginal Council.

Presentations were made to the BDAC in April 2023 and to the NAC in April 2024.

Minister Close met with BDAC in February 2024.

1.7 Project Reference Group

A Project Reference Group (PRG) was established in 2023 by SA Water after the announcement of Billy Lights Point as the preferred location for the Project site.

The PRG is comprised of eight local community members representing various interest areas and provides feedback to SA Water to help inform the progression of Project.

The group comprises representatives from the aquaculture industry, Regional Development Australia Eyre Peninsula, Eyre Peninsula Local Government Association, City of Port Lincoln and the Lower Eyre Council, including:

- Delfina Lanzilli (CEO Lower Eyre Council)
- Helen Lamont (Lamont Connections)
- Dean Johnson (LGA President)
- Peter Scott (CEO EPLGA)
- Ryan Viney (CEO RDAEP)
- Rob Gratton (CEO Cleanseas)
- Ray Henderson (Yumbah Aquaculture)
- Jonathan Clark (General Manager, EP Landscape Board)
- David Henchliffe (Project Director SA Water).

Meetings of the group are held either in the lead up to and/or post project milestones and when information is available to be shared and discussed with the group.

1.8 Aquaculture and Marine Industry

Some sections of the aquaculture industry have continued to express concern over potential impacts of the desalination plant on the marine environment; with particular concern regarding the location of the intake and outfall pipelines. In response to this, SA Water has undertaken continued engagement with this industry to seek to address concerns with evidence based on continued modelling and assessments.

As part of this engagement, an aquaculture industry group nominated member was appointed to SA Water's PRG, to represent the interests of the industry.

Further to this ongoing liaison between SA Water and the aquaculture industry has taken place. This includes:

- Specific marine science research commissioned by SA Water in 2022 to specifically address the two primary concerns raised by the mussel industry, these being salinity accumulation over time and the entrainment and entrapment of mussel spat (2022)
- Subsequent presentations and discussions with the Site Selection Committee which included representatives from a number of sectors within the aquaculture industry (2022/23)
- Marine science forums focusing specifically on the outcomes of the marine science research for both industry and community (May 2023)
- Marine science roundtable with aquaculture industry representative and their scientists (September 2023)
- One-on-one meetings between key aquaculture industry representatives and SA Water (2022 and 2023).

1.9 Community

The following community engagement activities were undertaken following the announcement of the Project site at Billy Lights Point:

- Mailout to all residents and businesses in Port Lincoln
- Regular website updates via SA Water's Water Talks.
- eNews updates to database consisting of 118 community and businesses people.
- Establishment of a Project Info Line (phone) and email, available to all members of the public.
- Establishment of a Project Information Centre (PIC) in Port Lincoln. The key aims of the PIC are to:
    - Provide an on-ground presence within the community to communicate formally and informally in real time.
    - Provide a place for community to go, with the understanding that rural communities respond better to having people there, on the ground and who can respond quickly to their enquiries.
    - Provide a space for small group sessions and discussions in real time; allowing for rapid responsiveness which can be critical in the first 6 months of a project.

  The PIC was open during business hours five days per week for the first few months and was then reviewed and reduced down to 3 days a week.
- Community information sessions were held in communities across the Eyre Peninsula. The primary purpose of these sessions was to allow the community to informally 'drop in' and learn about the final site for the desalination plant, and to understand the process to be followed post-site selection finalisation.
- Several Community Marine Science Forums were held to allow the community an opportunity to understand the marine science and modelling. The forms facilitated presentations by SARDI, and were given to the following groups:
    - Regional Development Australia Board
    - Eyre Peninsula Local Government Association Board
    - City of Port Lincoln.

Additionally, and upon request, the SA Water Engagement Team presented to several groups in the community in 2023, including:

- St Josephs College (school)
- Navigator college (school)
- CWA SA (policy body)
- Port Neill CWA
- Lipson Progress Association.

In March 2024, an economic opportunities forum was hosted by SA Water and the early contractor engaged for the Project (Acciona) in Port Lincoln for business owners and job seekers to understand the development and expected opportunities.

A community information session was held on 8 May 2024 with Minister Champion and SA Water's Chief Executive, David Ryan in attendance.

1.10 Marine Science Review Panel (MSRP)

The Marine Science Review Panel was established to provide independent technical feedback and advice to ensure the objectives of the environmental assessment process are achieved through the following:

- Advising on the adequacy of environmental investigations and assessments, in terms of their nature, extent and scope, and ensuring that all areas of major environmental concern are addressed.
- Advice on the robustness of investigation and assessment methodology regarding the scientifically and technically rigorous.
- Providing an expert review of investigation outcomes and advising whether the technical interpretation of outcomes can be supported by data presented.
- Providing feedback on assessment reports and documents (including design considerations) that have the potential to impact on the marine environment.
- Advising on actions to overcome any identified gaps in knowledge following the investigations including further investigation requirements.
- Providing an aggregation of expertise and information to ensure timely delivery of an appropriate environmental impact assessment.
- Providing a summary of the outcomes and recommendations from each meeting in the form of a meeting statement.
- Where appropriate, and through the Chair, provide response to marine queries raised by stakeholders and community groups (including the Site Selection Committee) as required.

Table 1 provides an overview of MSRP membership.

Table 1 Membership of MSRP

Role/Advice Area	Panel Member	Organisation
Chair	Dr Don Plowman	
Ecology	Professor Sean Connell	School of Biological Sciences, Faculty of Sciences, University of Adelaide
Ecotoxicology	Dr Anu Kumar	CSIRO
Environmental Engineer	Dr Ian Wallis	Consulting Environment Engineers
Marine Ecology and Fisheries	Professor Alistair Hobday	CSIRO
Oceanographer	Dr John Luick	Austides Consulting
SA Water Representative – Senior Environmental Impact Assessment Officer	Dr Hazel Vandeleur	SA Water

Meetings of the MSRP were held on the following dates:

- 27 June 2022
- 10 June 2022
- 9 December 2022
- 15 May 2023
- 7 July 2023
- 15 September 2023
- 23 November 2023
- 2 February 2024
- 10 May 2024
- 2 May 2024.

1.11 Industry and suppliers

SA Water held several industry and business sessions, aimed at informing local business, supply chain, and job seekers of how to get involved in the project.

- **Supply-chain event, Tuesday 19 December 2023:** Held at the Project Information Centre, three sessions informed local supply-chain businesses on how to get involved with the Project, with a special presentation from ECI partner ACCIONA.
- **Economic Opportunities Forum, Tuesday 5 March 2024:** Attended by more than 70 local businesses and job seekers, attendees were updated on the project by SA Water and ECI partner ACCIONA, with special presentations from the Office of the Industry Advocate and the Regional Development Australia Eyre Peninsula, The presentation was followed by an expo-style event, where businesses and job seekers registered their and networked. Employment service providers were also present at the event, and were accepting registrations from job seekers or those looking to upskill.
- **Port Lincoln Chamber of Commerce and Tourism, Wednesday 28 February:** SA Water provided an update of the project to the Chamber Committee and other interested businesses at its monthly meeting. SA Water has been invited to present to the group again in 6 months.
- **Regional Development Board Australia Eyre Peninsula, Monday 15 April 2024:** Partnering with RDAEP to present a session to local businesses on the Industry Capability Network, how to connect industry to projects, and how to express interest in projects such as the Eyre Peninsula Desalination Plant Project.

Appendix B Preliminary design

EPDP Development Application Drawings

Status as at 31.05.24 - 47 drawings	
EPDP-600-SMC-GEN-DRG-0001	Desalination Plant - Cover Sheet / Location Plan
EPDP-600-SMC-GEN-DRG-0004	Desalination Plant - Overall Site Plan / Site Location
EPDP-600-SMC-GEN-DRG-0005	Desalination Plant - Notes
EPDP-600-SMC-GEN-DRG-0011	Desalination Plant - General Arrangement Plan - Plant
EPDP-600-SMC-GEN-DRG-0012	Desalination Plant - General Arrangement Plan - Access Road
EPDP-600- SMC-SCF-DRG-0001	Desalination Plant - Security & Fencing - Plant and Acced Road
EPDP-600-SMC-GEN-DRG-0013	Desalination Plant - General Arrangement Typical Sections
EPDP-600-ACA-ARC-SKT-0001	RO building - Facades
EPDP-600-SMC-CIV-DRG-0005	Desalination Plant - Bulk Earthworks Plan - Plant
EPDP-600-SMC-CIV-DRG-0006	Desalination Plant - Bulk Earthworks Plan - Access Road
EPDP-600-SMC-CIV-DRG-0007	Desalination Plant - Bulk Earthworks Plan - Typical Sections
EPDP-600-SMC-CIV-DRG-0008	Desalination Plant - Bulk Earthworks Plan - Typical Sections
EPDP-600-SMC-CIV-DRG-0031	Desalination Plant - Final Surface Contours - Plant
EPDP-600-SMC-CIV-DRG-0032	Desalination Plant - Final Surface Contours - Access Road
EPDP-600-SMC-CIV-DRG-0051	Desalination Plant - Process Lagoon - Plant
EPDP-600-SMC-SWD-DRG-0001	Desalination Plant - Stormwater Drainage - Plant
EPDP-600-SMC-SWD-DRG-0002	Desalination Plant - Stormwater Drainage - Access Road
EPDP-600-SMC-SWD-DRG-0011	Desalination Plant - Stormwater Basin - Plant
EPDP-600-SMC-STR-DRG-1051	Control Room - Structural General Arrangement
EPDP-600-SMC-STR-DRG-1451	Control Room - Structural Elevations
EPDP-600-SMC-STR-DRG-3102	Concrete Structures - Structural - Gross Solids Trap - Sections
EPDP-600-SMC-STR-DRG-3112	RO Building - Structural - Brine Sump Concrete Plan
EPDP-602-AGA-MEC-DRG-0001	Process Plant - Limestone Contactors Elevations and General Arrangement Plan View
EPDP-602-AGA-MEC-DRG-0002	Process Plant - Mechanical - Limestone Contactors - Elevation and Iso View
EPDP-602-AGA-MEC-DRG-0003	Process Plant - Recuperation tTank Plan, Section and Iso View
EPDP-602-AGA-MEC-DRG-0004	Process Plant - Calcite Storage Tank Plan, Section and Iso View
EPDP-602-AGA-MEC-DRG-0005	Process Plant - CO2, RO Flushing and Neutralisation Plan, Section and Iso View
EPDP-603-AGA-MEC-DRG-0002	Process Plant - UF Backwash Plan, Section and Iso View
EPDP-700-SMC-STR-DRG-0101	Treated Water Tank Design – Structural - Tank Base Layout
EPDP-700-SMC-STR-DRG-0401	Treated Water Tank Design – Structural - Profile Sections Sheet 1
EPDP-200-AED-CIV-DRG-1001	Marine Intake Pipelines and Intake Structure - Civil - Marine infrastructure – Layout plan
EPDP-300-AED-CIV-DRG-1001	Marine Intake Pipelines and Intake Structure - Civil - Wet Well - General Arrangement Plan
EPDP-300-AED-CIV-DRG-1003	Marine Intake Pipelines and Intake Structure - Structural - Wet well - Section and Elevation
EPDP-200-AED-CIV-DRG-3001	Marine Intake Pipelines and Intake Structure - Civil - Intake Pipeline - Typical Section and Details
EPDP-200-AED-CIV-DRG-2001	Marine Intake Pipelines and Intake Structure - Civil - Marine Intake Pipeline System – Plan & Long Section – Sheet 1
EPDP-200-AED-CIV-DRG-2002	Marine Intake Pipelines and Intake Structure -Civil - Marine Intake Pipeline System – Plan & Long Section – Sheet 2
EPDP-500-AED-CIV-DRG-1001	Marine Intake Pipelines and Intake Structure - Civil - Marine Outfall Pipeline System – Plan & Long section – Sheet 1
EPDP-500-AED-CIV-DRG-1002	Marine Intake Pipelines and Intake Structure - Civil - Marine Outfall Pipeline System – Plan & Long Section – Sheet 2
EPDP-500-AED-CIV-DRG-2001	Marine Intake Pipelines and Intake Structure - Civil - Outfall Diffuser - General Arrangement
EPDP-200-AED-CIV-DRG-3002	Marine Intake Pipelines and Intake Structure - Civil - Intake Pipeline - Typical Section and Details
EPDP-200-AED-CIV-DRG-3003	Marine Intake Pipelines and Intake Structure - Civil - Intake Pipeline - Typical Section and Details
EPDP-500-AED-CIV-DRG-1003	Marine Intake Pipelines and Intake Structure - Civil - Outfall Pipeline - Typical Section and Details
EPDP-500-AED-CIV-DRG-1004	Marine Intake Pipelines and Intake Structure - Civil - Outfall Pipeline - Typical Section and Details
EPDP-200-AED-CIV-DRG-4003	Marine Intake Pipelines and Intake Structure - Structural - Intake Towers - Elevations
EPDP-300-SMC-MEC-DRG-0001	Marine Intake Pipelines and Intake Structure - Mechanical - Intake Pump Station - Plan
EPDP-300-SMC-MEC-DRG-0002	Marine Intake Pipelines and Intake Structure -Mechanical - Intake Pump Station - Section
EPDP-300-AED-CIV-DRG-2001	Marine Intake Pipelines and Intake Structure - Structural - Brine Sump - Concrete Plan, Sections and Elevations

EYRE PENINSULA DESALINATION PLANT

SITE LOCATION

SCALE 1:5000 50 0 100 200

ISSUED FOR DEVELOPMENT APPLICATION

NOT FOR CONSTRUCTION
PRELIMINARY DRAWING FOR INFORMATION ONLY

REVISION PANEL

REV	DATE	DRN	DETAILS	APR'D
UR2	10.05.2024	KWS	UNDER REVISION	
UR1	12.04.2024		UNDER REVISION	

CURRENT REVISION CONTRACTOR:

CURRENT REV AUTHORISED

SIGNATURE

DESIGN PANEL

DESIGNED

DRAWN

REVIEWED

AUTHORISED

SIGNATURE

CONTRACTOR:

Government of South Australia

SA Water

This drawing is the property of the SOUTH AUSTRALIAN WATER CORPORATION and shall not be copied or modified in part or in whole without authorization.

EYRE PENINSULA DESALINATION PLANT
EX BHP - BILLY LIGHTS POINT
DESALINATION PLANT
COVER SHEET
SITE LOCATION

PROJECT DRAWING NUMBER
EPDP-600-SMC-GEN-DRG-0001

A1 SHT SIZE | MAXIMO ID: P041915 | PROJECT No: A0012-0025 | UR2 REVISION

TOTAL SHEETS: | DISCIPLINE: GENERAL

SUPERSEDES:

DRAWING NUMBER
P041915-06-00002 01
YEAR NUMBER SHEET

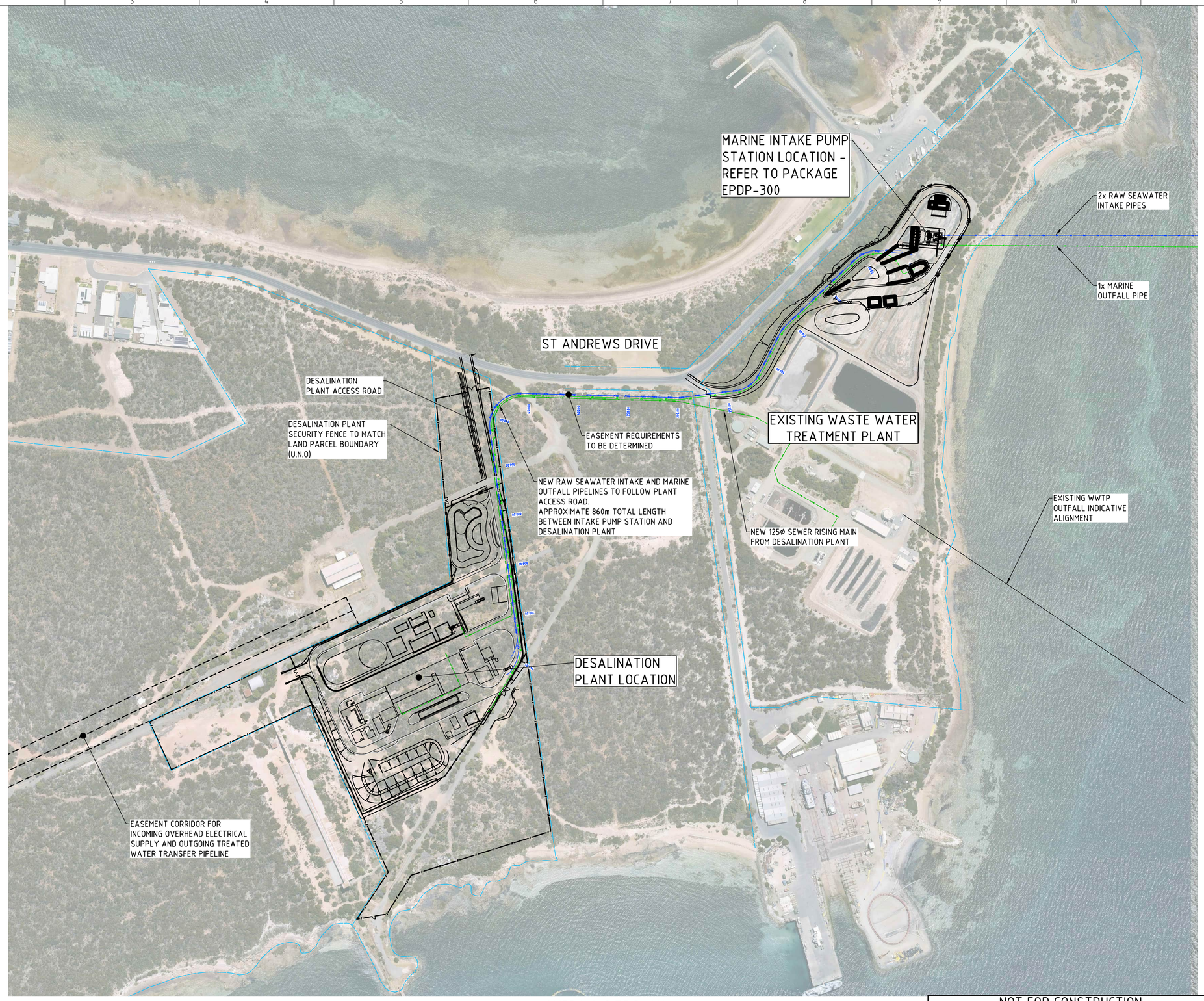

OVERALL SITE PLAN

SCALE 1:2000

ISSUED FOR DEVELOPMENT APPLICATION

NOT FOR CONSTRUCTION
PRELIMINARY DRAWING FOR INFORMATION ONLY

SCALE 1:2000 20 0 20 40 60 80 100

N

REVISION PANEL					
REV	DATE	DRN	DETAILS	APR'D	CURRENT REV AUTHORISED
					SIGNATURE
UR2	10.05.2024	KWS	UNDER REVISION		
UR1	12.04.2024		UNDER REVISION		
CURRENT REVISION CONTRACTOR:					

DESIGN PANEL	
DESIGNED	AUTHORISED
DRAWN	SIGNATURE
REVIEWED	
CONTRACTOR:	

Government of South Australia

SA Water

This drawing is the property of the SOUTH AUSTRALIAN WATER CORPORATION and shall not be copied or modified in part or in whole without authorization.

EYRE PENINSULA DESALINATION PLANT
EX BHP - BILLY LIGHTS POINT
DESALINATION PLANT
OVERALL SITE PLAN
SITE LOCATION

PROJECT DRAWING NUMBER
EPDP-600-SMC-GEN-DRG-0004

A1 SHT SIZE | MAXIMO ID: P041915 | PROJECT No: A0012-0025 | UR2 REVISION

TOTAL SHEETS: | DISCIPLINE: GENERAL

SUPERSEDES:

DRAWING NUMBER
P041915-06-00001 01
YEAR NUMBER SHEET

GENERAL NOTES:

1. COORDINATE BASE IS MGA2020.
2. ALL LEVELS ARE TO AUSTRALIAN HEIGHT DATUM (AHD).
3. THESE DRAWINGS SHALL BE READ IN CONJUNCTION WITH ALL DRAWINGS ISSUED BY ALL CONSULTANTS ACROSS VARIOUS DISCIPLINES FOR THE EPDP WORKS, INCLUDING CIVIL, STRUCTURAL, YARD SERVICES, MECHANICAL, ELECTRICAL, PROCESS, MARINE WORKS.
4. ANY DISCREPANCY IDENTIFIED BETWEEN ANY DRAWINGS DOCUMENTATION OR THE SPECIFICATIONS SHALL BE REPORTED TO THE ENGINEER PRIOR TO WORKS PROCEEDING.
5. FOR ALL DIMENSIONS & SETTING OUT DETAILS OF BUILDINGS AND STRUCTURES, REFER TO ARCHITECTURAL DRAWINGS. FOR SETOUT OF CIVIL WORKS, REFER TO DIGITAL OUTPUTS.
6. ALL ROAD DIMENSIONS ARE TO FACE OF KERB AT WATERTABLE.
7. ALL WORK SHALL BE CARRIED OUT IN ACCORDANCE WITH THE SPECIFICATIONS.
8. ALL LEVELS AND DIMENSIONS ARE TO BE CONFIRMED ON SITE BY THE CONTRACTOR PRIOR TO CONSTRUCTION. DIMENSIONS SHALL NOT BE SCALED OFF DRAWINGS.
9. MAINTAIN AND PROTECT ALL PERMANENT SURVEY MARKERS DURING THE COURSE OF THE WORKS.
10. DURING CONSTRUCTION THE CONTRACTOR SHALL BE RESPONSIBLE FOR MAINTAINING ALL STRUCTURES AND SERVICES IN A SAFE AND STABLE CONDITION, ENSURING NO PART IS OVERSTRESSED UNDER CONSTRUCTION ACTIVITIES.
11. WORKMANSHIP AND MATERIALS SHALL BE IN ACCORDANCE WITH THE RELEVANT AUSTRALIAN STANDARDS INCLUDING ALL AMENDMENTS AND THE LOCAL STATUTORY AUTHORITIES, EXCEPT WHERE VARIED BY THE CONTRACT DOCUMENTS.
12. THE SERVICES INFORMATION INDICATED ON THESE DRAWINGS IS IN APPROXIMATE LOCATIONS ONLY. THE DETAIL OR EXTENT OF SERVICES INFORMATION SHOWN CANNOT BE GUARANTEED TO BE ACCURATE OR COMPLETE. THE CONTRACTOR SHALL BE RESPONSIBLE FOR LOCATING AND PROTECTING EXISTING SERVICES.
13. ALL EXISTING UNDERGROUND SERVICES ARE TO BE LOCATED AND DEPTHED BY THE CONTRACTOR PRIOR TO CONSTRUCTION.
14. SERVICE AUTHORITY REPRESENTATIVES SHALL BE PRESENT WHEN WORKING IN CLOSE PROXIMITY TO THEIR SERVICES. PROVIDE PROTECTION AS REQUIRED TO MEET THEIR REQUIREMENTS.
15. VEGETATION IS TO BE LEFT UNDISTURBED WHERE POSSIBLE, UNLESS DIRECTLY OBSTRUCTING WORKS OR NOTED OTHERWISE. REFER TO SA WATER ENVIRONMENTAL SERVICES FOR ASSESSMENT AND APPROVAL PRIOR TO ANY VEGETATION REMOVAL OR CUTBACK.
16. EROSION AND DRAINAGE MANAGEMENT MEASURES TO BE INCORPORATED INTO THE CONTRACTOR'S CONSTRUCTION ENVIRONMENTAL MANAGEMENT PLAN. INSTALL TO PROTECT AGAINST SCOUR AND SILTATION DURING CONSTRUCTION AND REMOVE AT THE COMPLETION OF WORKS. PROVIDE IN ACCORDANCE WITH THE STORMWATER POLLUTION PREVENTION CODES OF PRACTICE (SA EPA). SANDBAGS OR SIMILAR APPROVED TO BE PLACED AROUND ENTRY TO DRAINAGE SYSTEMS.
17. ALL TESTING SHALL BE PERFORMED BY INDEPENDENT NATA ACCREDITED AUTHORITY. TEST REPORTS SHALL BE FORWARDED TO THE SUPERINTENDENT.
18. FOUNDATIONS FOR ALL STRUCTURES SHALL BE INSPECTED BY A SUITABLY QUALIFIED GEOTECHNICAL ENGINEER AND TESTED TO ENSURE MINIMUM ALLOWABLE BEARING PRESSURES ARE ACHIEVED. IF FOUND TO BE UNSATISFACTORY, PROVIDE ANY NECESSARY FOUNDATION TREATMENT.
19. WHERE PROPRIETARY PRODUCTS ARE SPECIFIED ON DRAWINGS EQUIVALENT ALTERNATIVES MAY BE USED SUBJECT TO APPROVAL BY THE ENGINEER.
20. OBTAIN NECESSARY PERMITS AND APPROVALS FROM RELEVANT AUTHORITIES AND LANDHOLDERS BEFORE COMMENCING WORK ON SITE.
21. AS CONSTRUCTED INFORMATION SHALL BE RECORDED IN MGA2020 COORDINATES IN ACCORDANCE WITH SA WATER TS0100.
22. REINSTATEMENT OF ROADWAY SURFACES, DRIVEWAYS, PATHS, ACCESS WAYS AND EASEMENTS SHALL SATISFY THE REQUIREMENTS OF COUNCIL AND THE SUPERINTENDENT.
23. ALL EXISTING SERVICE COVERS/TOPSTONES WITHIN THE AREA OF RECONSTRUCTED SURFACES ARE TO MATCH NEW SURFACE LEVEL AND CROSSFALL.
24. SIGNS AND LINEMARKING TO BE IN ACCORDANCE WITH "CODE OF TECHNICAL REQUIREMENTS FOR THE LEGAL USE OF TRAFFIC CONTROL DEVICES (DIT) AND AS1742.

SITE PREPARATION AND EARTHWORKS NOTES:

1. DEMOLITION OF REMNANT STRUCTURES AND SERVICES FROM PREVIOUS SITE USE SHALL BE UNDERTAKEN WITHIN THE ZONE OF WORKS PRIOR TO CONSTRUCTION. ELEMENTS TO BE RETAINED AND THE EXTENT OF DEMOLITION SHALL BE DETERMINED IN CONSULTATION WITH SA WATER FOR ITEMS IN PROPOSED LAYDOWN AREAS AND/OR CROSSING LAND BOUNDARIES (SUCH AS THE CONVEYOR INTO THE OLD SAND BUNKER).
2. THE EXTENT OF VEGETATION CLEARANCE WILL REQUIRE SPECIFIC APPROVAL FROM SA WATER ENVIRONMENTAL GROUP PRIOR TO COMMENCING WORKS.
3. REFER TO THE SITE GEOTECHNICAL REPORTS FOR INDICATION OF GROUND CONDITIONS. UNDERTAKE SUCH FURTHER TESTING AS MAY BE REQUIRED TO VERIFY CONDITIONS IN SPECIFIC AREAS AND SEEK ADVICE FROM A GEOTECHNICAL ENGINEER TO VALIDATE REQUIREMENTS.
4. THE SITE SHALL BE STRIPPED OF ANY TOPSOIL, ROOTS OR HIGHLY ORGANIC MATERIALS AND LOOSE SANDS. SUBJECT TO CONTAMINATION REQUIREMENTS, TOPSOIL MATERIAL SHALL BE STOCKPILED AND RESPREAD ON LANDSCAPING AREAS UPON COMPLETION. THE LOCATION OF THE STOCKPILE SHALL BE AGREED WITH THE SUPERINTENDENT.
5. THE CONTRACTOR SHALL REMAIN OBSERVANT WITH REGARD TO THE MATERIALS BEING EXCAVATED AND ADVISE THE SUPERINTENDENT IMMEDIATELY IF MATERIAL THAT MAY BE CONTAMINATED OR CLASSIFIED AS POTENTIAL ACID SULPHATE SOIL IS ENCOUNTERED.
6. ALL SOFT/DISTURBED SOILS SHALL BE REMOVED TO FIRM NATURAL GROUND. BACKFILL AND BUILD UP SITE IN MAX 200mm THICK LAYERS WITH SELECT FILL MATERIAL (IN ACCORDANCE WITH THE SPECIFCIATION) COMPACTED TO 95% SMDD, TESTED TO AS3798. THE ENTIRE FOUNDING AREA OF STRUCTURES SHALL BE PROOF ROLLED TO AS3798 PRIOR TO APPLICATION OF A BLINDING LAYER BELOW THE FLOOR SLAB.
7. TRENCH EXCAVATION SHALL GIVE CONSIDERATION TO THE PRESENCE OF CALCRETE AND UNDERLYING GRANITE. WHERE DETAILED EXCAVATIONS ARE REQUIRED, CONSIDER THE PRACTICALITY OF SUCH EXCAVATION OR WHETHER TO OVEREXCAVATE AND BACKFILL WITH SELECT FILL IN ACCORDANCE WITH THE SPECIFICATION FOR SIMPLER TRENCHING AT A LATER STAGE.
8. EXTENTS AND WORKABILITY OF UNDERLYING ROCK NEED FURTHER INVESTIGATION. SUBMIT PROPOSED METHODS OF ROCK EXCAVATION FOR APPROVAL PRIOR TO COMMENCING WORKS.
9. EARTHWORKS BULK FILL TO BE PLACED IN LAYERS NO THICKER THAN 200mm AND EACH LAYER COMPACTED TO 95% SMDD AS PER AS1289 METHOD 5.1.1.
10. IMPORTED MATERIALS SHALL COMPLY WITH THE REQUIREMENTS OF THE SPECIFICATION.
11. UNDERTAKE DEWATERING DURING WORKS IF NECESSARY TO PLACE ALL EARTHWORKS IN A DRY CONDITION.
12. ROCK BEACHING FOR EROSION PROTECTION SHALL BE A QUARRY PRODUCT AND MUST BE FREE FROM LAMINATIONS OR WEAK CLEAVAGES, AND BE HARD AND DURABLE FROM THE ACTION OF THE SEA OR OTHER WATER FLOW, PLACED ON GEOTEXTILE.
13. RETAINING WALL LEVELS ARE TO BE CONFIRMED ON SITE PRIOR TO CONSTRUCTION AND AFTER REMOVAL OF ANY EXISTING FENCING.

HEALTH & SAFETY NOTES:

1. REFER TO THE SAFETY IN DESIGN RISK REGISTER AND THE CONSTRUCTION AND ENVIRONMENTAL MANAGEMENT PLAN (CEMP).
2. THE MAIN CONTRACTOR & ALL SUBCONTRACTORS MUST COMPLY WITH ALL APPLICABLE OCCUPATIONAL HEALTH & SAFETY ACTS INCLUDING THE SA WORK HEALTH AND SAFETY ACT 2012, AND LOCAL CONSTRUCTION SAFETY REGULATIONS MADE THEREUNDER, TOGETHER WITH APPROVED CODES OF PRACTICE, GUIDANCE NOTES, AUSTRALIAN STANDARDS AND OTHER RELEVANT DOCUMENTATION.
3. IDENTIFY HAZARDS OR WORK SEQUENCES WHICH MAY BE A RISK TO THE HEALTH & SAFETY OF CONSTRUCTION WORKERS. CARRY OUT RISK ASSESSMENTS AND IF POSSIBLE, ELIMINATE THE RISK COMPLETELY AS PER HIERARCHY OF CONTROLS MANAGEMENT, IF NOT, ADVISE SITE MANAGEMENT FOR INCLUSION IN THE HEALTH & SAFETY PLAN AND INCORPORATE INTO CONTRACTORS JSA'S.
4. EXCAVATIONS FOR INSTALLATION OF SERVICES SHALL BE IN ACCORDANCE WITH THE OH&S APPROVED CODE OF PRACTICE "SAFETY PRECAUTIONS IN TRENCHING OPERATIONSõ AND ALL OTHER STATUTORY AUTHORITY REGULATIONS. NO ONE SHALL ENTER AN EXCAVATION, PIT OR TRENCH EXCEEDING 1.5m IN DEPTH UNLESS APPROPRIATE MEASURES ARE TAKEN TO PREVENT COLLAPSE.
5. PROVIDE FENCING, SIGNAGE AND TRAFFIC CONTROL TO SAFELY MANAGE CONSTRUCTION WORKS.

ISSUED FOR DEVELOPMENT APPLICATION

NOT FOR CONSTRUCTION
PRELIMINARY DRAWING FOR INFORMATION ONLY

REVISION PANEL

REV	DATE	DRN	DETAILS	APR'D
UR2	10.05.2024	KWS	UNDER REVISION	
UR1	12.04.2024		UNDER REVISION	

CURRENT REVISION CONTRACTOR:

CURRENT REV AUTHORISED

SIGNATURE

DESIGN PANEL

DESIGNED	AUTHORISED
DRAWN	SIGNATURE
REVIEWED	
CONTRACTOR:	

Government of South Australia
SA Water

This drawing is the property of the SOUTH AUSTRALIAN WATER CORPORATION and shall not be copied or modified in part or in whole without authorization.

EYRE PENINSULA DESALINATION PLANT
EX BHP - BILLY LIGHTS POINT
DESALINATION PLANT
NOTES

PROJECT DRAWING NUMBER
EPDP-600-SMC-GEN-DRG-0005

A1 SHT SIZE | MAXIMO ID: P041915 | PROJECT No: A0012-0025 | UR2 REVISION

TOTAL SHEETS: | DISCIPLINE:

SUPERSEDES:

DRAWING NUMBER

YEAR NUMBER SHEET

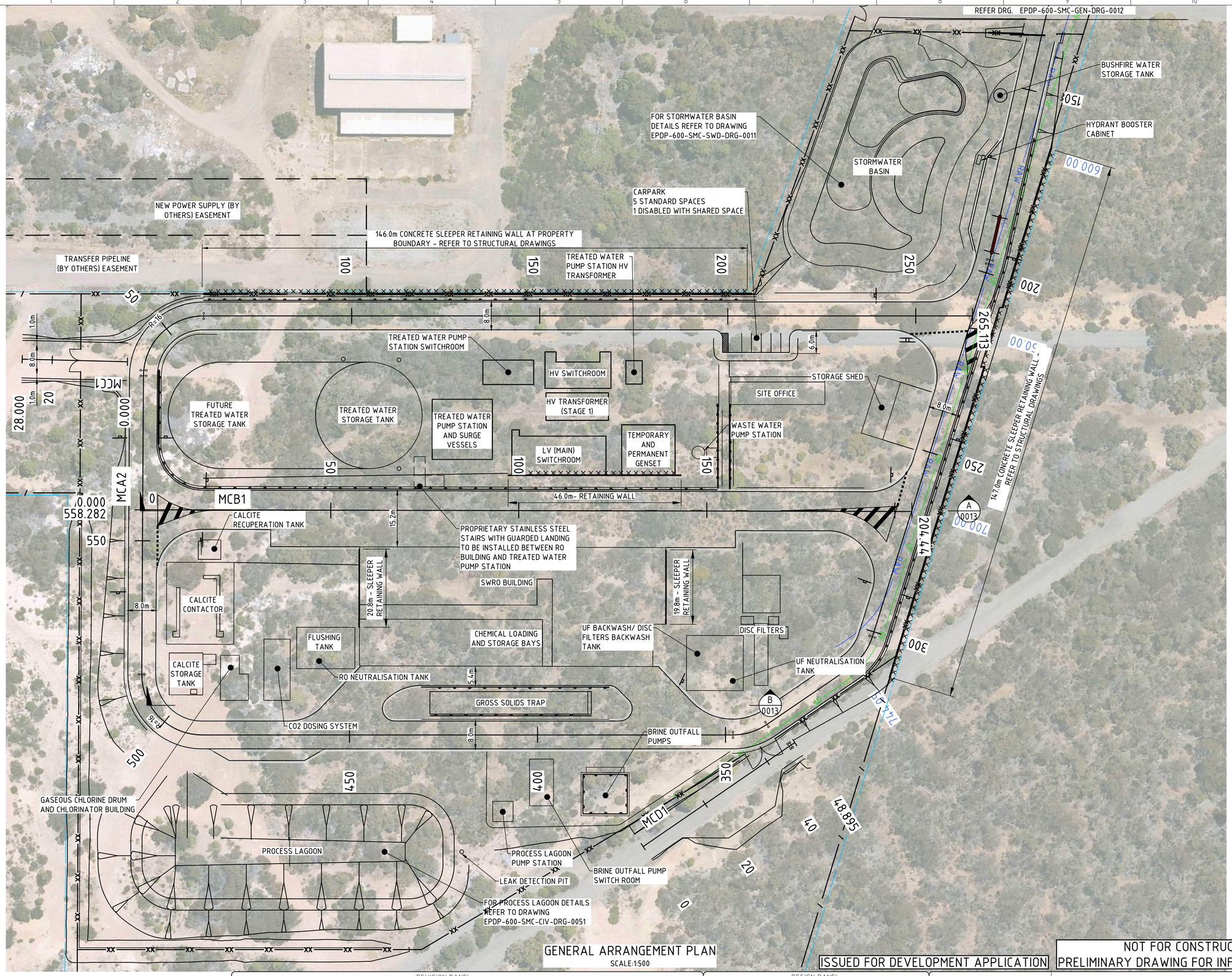

LEGEND:

- PROPERTY BOUNDARY
- EASEMENT CORRIDOR (SERVICES)
- STOCK FENCE
- HIGH SECURITY MESH FENCE
- GUARD RAIL
- HOLDING RAIL
- CONCRETE RETAINING WALL
- OF — MARINE OUTFALL PIPE
- RAW — RAW SEAWATER INTAKE PIPE

GENERAL ARRANGEMENT PLAN

SCALE:1:500

SCALE 1:500 (5 0 10 20)

ISSUED FOR DEVELOPMENT APPLICATION

NOT FOR CONSTRUCTION
PRELIMINARY DRAWING FOR INFORMATION ONLY

REVISION PANEL

REV	DATE	DRN	DETAILS	APR'D
UR2	10.05.2024	KWS	UNDER REVISION	
UR1	12.04.2024		UNDER REVISION	

CURRENT REVISION CONTRACTOR:

CURRENT REV AUTHORISED

SIGNATURE

DESIGN PANEL

DESIGNED
DRAWN
REVIEWED
CONTRACTOR:

AUTHORISED
SIGNATURE

Government of South Australia
SA Water

This drawing is the property of the SOUTH AUSTRALIAN WATER CORPORATION and shall not be copied or modified in part or in whole without authorization.

EYRE PENINSULA DESALINATION PLANT
EX BHP - BILLY LIGHTS POINT
DESALINATION PLANT
GENERAL ARRANGEMENT PLAN
PLANT

PROJECT DRAWING NUMBER: EPDP-600-SMC-GEN-DRG-0011

A1 SHT SIZE | MAXIMO ID: P041915 | PROJECT No: A0012-0025 | UR2 REVISION

TOTAL SHEETS: | DISCIPLINE: GENERAL

SUPERSEDES:

DRAWING NUMBER: P041915-06-00004 01
YEAR NUMBER SHEET

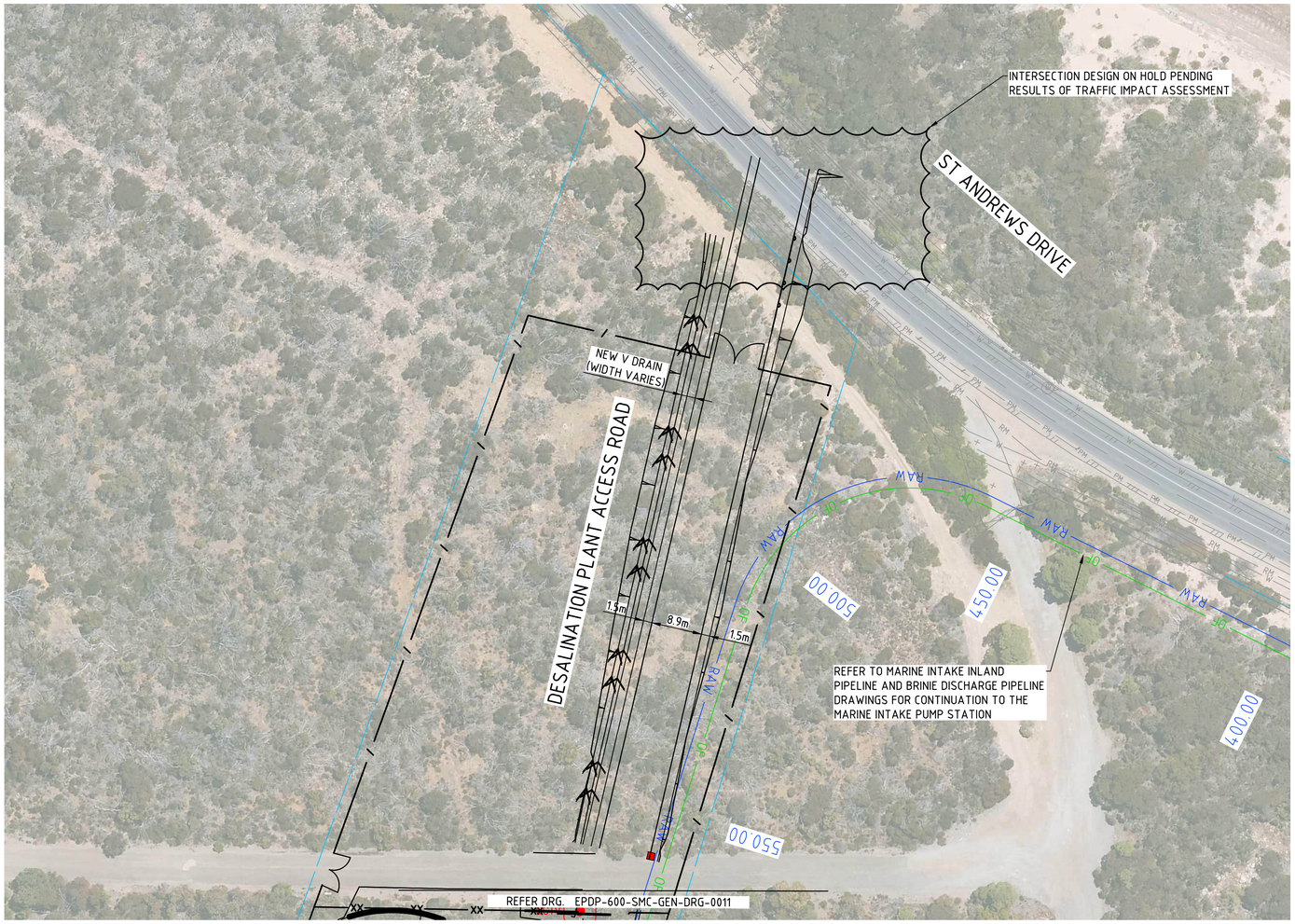

GENERAL ARRANGEMENT PLAN

SCALE 1:500

LEGEND:

- PROPERTY BOUNDARY
- STOCK FENCE
- HIGH SECURITY MESH FENCE
- GUARD RAIL
- RAW — RAW SEAWATER INTAKE PIPE
- OF — MARINE OUTFALL PIPE

SCALE 1:500 (5 0 10 20)

ISSUED FOR DEVELOPMENT APPLICATION

NOT FOR CONSTRUCTION
PRELIMINARY DRAWING FOR INFORMATION ONLY

REVISION PANEL

REV	DATE	DRN	DETAILS	APR'D
UR2	10.05.2024	KWS	UNDER REVISION	
UR1	12.04.2024		UNDER REVISION	

CURRENT REVISION CONTRACTOR:

CURRENT REV AUTHORISED

SIGNATURE

DESIGN PANEL

DESIGNED — AUTHORISED

DRAWN — SIGNATURE

REVIEWED

CONTRACTOR:

Government of South Australia — SA Water

This drawing is the property of the SOUTH AUSTRALIAN WATER CORPORATION and shall not be copied or modified in part or in whole without authorization.

EYRE PENINSULA DESALINATION PLANT
EX BHP - BILLY LIGHTS POINT
DESALINATION PLANT
GENERAL ARRANGEMENT PLAN
ACCESS ROAD

PROJECT DRAWING NUMBER
EPDP-600-SMC-GEN-DRG-0012

A1 (SHT SIZE) — MAXIMO ID: P041915 — PROJECT No: A0012-0025 — UR2 (REVISION)

TOTAL SHEETS: — DISCIPLINE: GENERAL

SUPERSEDES:

DRAWING NUMBER
P041915-06-00004 02
YEAR NUMBER SHEET

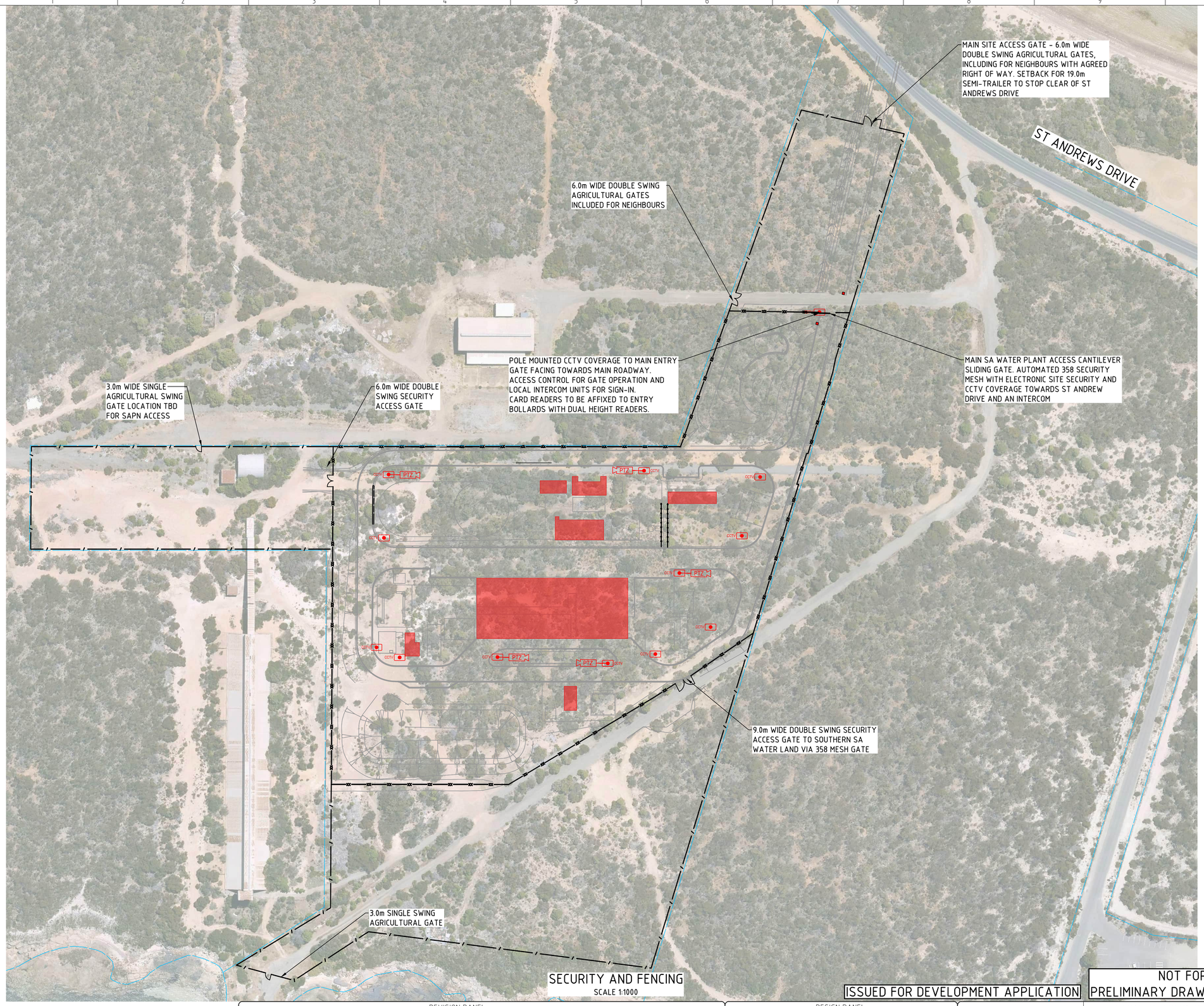

SECURITY AND FENCING

SCALE 1:1000

LEGEND:

—— , —— , ——	STOCK FENCE
——xx——	358 HIGH SECURITY MESH FENCE - 3.0m HIGH, PVC COATED WITH RAZOR WIRE AT TOP. ALL ELEMENTS NOT PVC COATED SHALL BE DUPLEX POWDER COATED TO AS4506 FOR A HIGH INDUSTRIAL MARINE ENVIRONMENT
CCTV	FIXED CAMERA CCTV POLE
PTZ	PTZ CAMERA LOCATION
■	DUAL LEVEL ACCESS CARD READER AND INTERCOM STATION
▭	RED HATCH DENOTES ACCESS CONTROL TO BE PROVIDED TO ALL ENTRY/EXIT LOCATION AND COVERAGE FOR INTRUDER (VOLUMETRIC) DETECTION TO BE PROVIDED THROUGHOUT BUILDING

NOTES:

1. ALL FENCING IS TO BE IN ACCORDANCE WITH TS0121.
2. ALL AGRICULTURE GATES TO HAVE MULTI PADLOCK ASSEMBLY.
3. SIGNAGE TO BE PLACED AT EACH GATE AND AT 30.0m INTERVALS ON PUBLIC FACING FENCE. ALSO TO INDICATE CCTV.
4. CONFIRMATION STILL REQUIRED FROM SA WATER TO EXTENT OF INTERNAL CCTV CAMERAS FOR REMOTE MONITORING OF PROCESS CONTROL SYSTEMS AS PER SECURITY RISK ASSESSMENT.
5. FOR RETAINING WALL LOCATIONS REFER TO DRAWING EPDP-600-SMC-CIV-DRG-0031

× REFER NOTE 3.

EXAMPLE SECURITY MESH FENCE

SCALE 1:500 5 0 10 20

REVISION PANEL				
REV	DATE	DRN	DETAILS	APR'D
UR2	10.05.2024	KWS	UNDER REVISION	
UR1	12.04.2024		UNDER REVISION	
CURRENT REVISION CONTRACTOR:				

CURRENT REV AUTHORISED

SIGNATURE

DESIGN PANEL	
DESIGNED	AUTHORISED
DRAWN	SIGNATURE
REVIEWED	
CONTRACTOR:	

ISSUED FOR DEVELOPMENT APPLICATION

NOT FOR CONSTRUCTION
PRELIMINARY DRAWING FOR INFORMATION ONLY

Government of South Australia

SA Water

This drawing is the property of the SOUTH AUSTRALIAN WATER CORPORATION and shall not be copied or modified in part or in whole without authorization.

EYRE PENINSULA DESALINATION PLANT
EX BHP - BILLY LIGHTS POINT
DESALINATION PLANT
SECURITY AND FENCING
PLANT AND ACCESS ROAD

PROJECT DRAWING NUMBER
EPDP-600-SMC-SCF-DRG-0001

A1 SHT SIZE | MAXIMO ID: P041915 | PROJECT No: A0012-0025 | UR2 REVISION

TOTAL SHEETS: | DISCIPLINE: SECURITY

SUPERSEDES:

DRAWING NUMBER

YEAR NUMBER SHEET

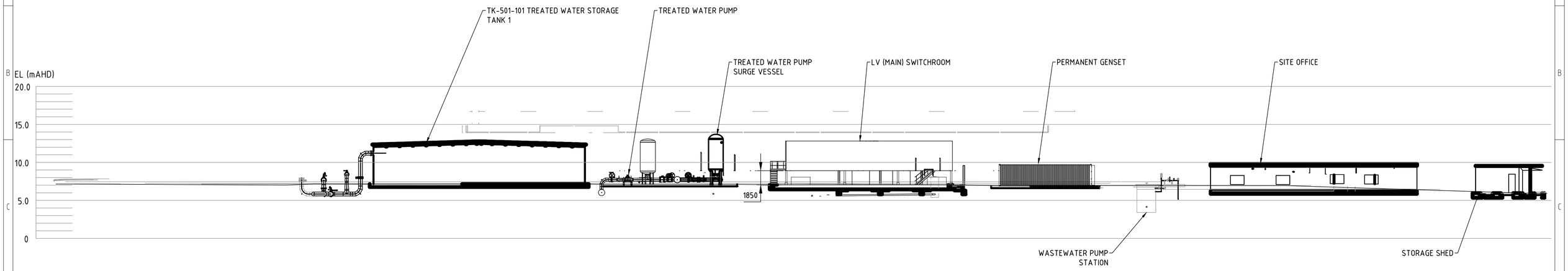

SECTION A
SCALE 1: 25
0011

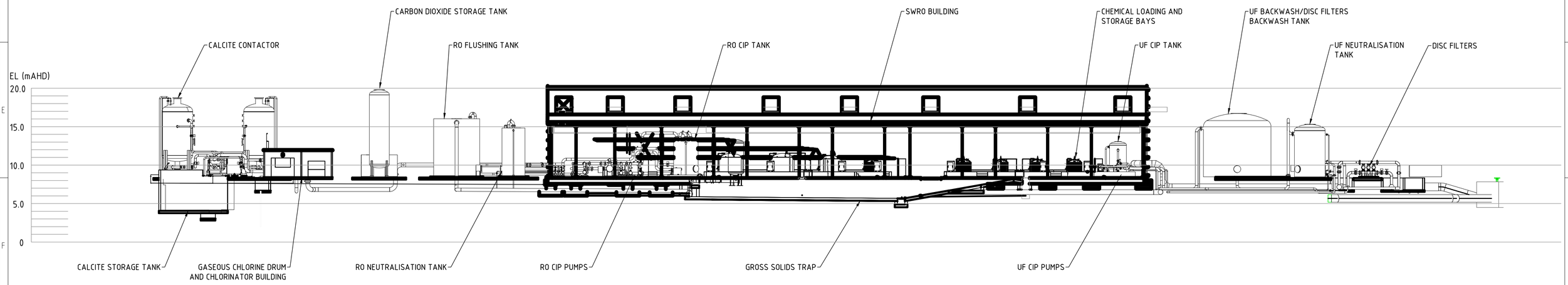

SECTION B
SCALE 1: 25
0011

ISSUED FOR DEVELOPMENT APPLICATION

NOT FOR CONSTRUCTION
PRELIMINARY DRAWING FOR INFORMATION ONLY

REVISION PANEL

REV	DATE	DRN	DETAILS	APR'D
UR2	10.05.2024	KWS	UNDER REVISION	
UR1	12.04.2024		UNDER REVISION	

CURRENT REVISION CONTRACTOR:

CURRENT REV AUTHORISED

SIGNATURE

DESIGN PANEL

DESIGNED
AUTHORISED
DRAWN
SIGNATURE
REVIEWED
CONTRACTOR:

Government of South Australia
SA Water

This drawing is the property of the SOUTH AUSTRALIAN WATER CORPORATION and shall not be copied or modified in part or in whole without authorization.

EYRE PENINSULA DESALINATION PLANT
EX BHP - BILLY LIGHTS POINT
DESALINATION PLANT
GENERAL ARRANGEMENT
TYPICAL SECTIONS

PROJECT DRAWING NUMBER
EPDP-600-SMC-GEN-DRG-0013

A1 SHT SIZE
MAXIMO ID: P041915
PROJECT No: A0012-0025
UR2 REVISION

TOTAL SHEETS:
DISCIPLINE:
SUPERSEDES:

DRAWING NUMBER
P041915-06-00005 01
YEAR NUMBER SHEET

80m

12.5m

NORTHERN ELEVATION

80m

SOUTHERN ELEVATION

11m

22m

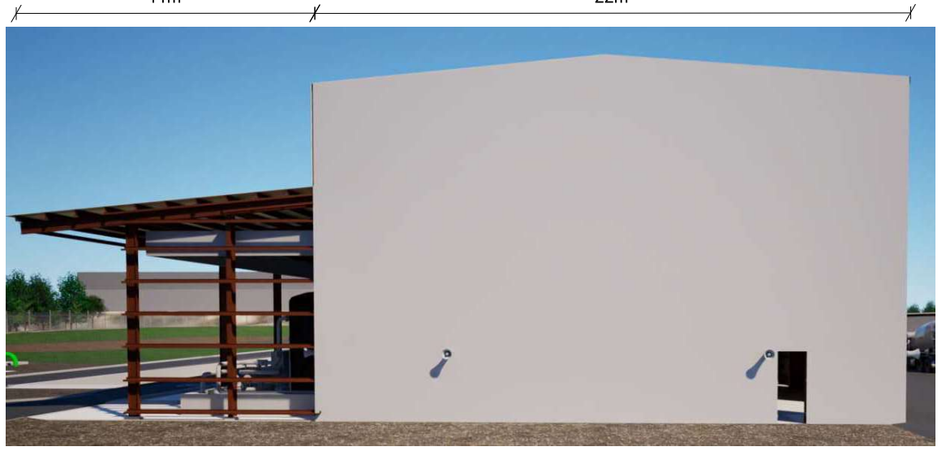

12.5m

EASTERN ELEVATION

22m

WESTERN ELEVATION

NOT FOR CONSTRUCTION
SKETCH FOR INFORMATION ONLY

REVISION PANEL

REV	DATE	DRN	R'D	CURRENT REV AUTHORISED
				SIGNATURE

SKETCH

CURRENT REVISION CONTRACTOR:

DESIGN PANEL

DESIGNED	AUTHORISED
DRAWN	SIGNATURE
REVIEWED	
CONTRACTOR:	

Government of South Australia

SA Water

This drawing is the property of the SOUTH AUSTRALIAN WATER CORPORATION and shall not be copied or modified in part or in whole without authorization.

EYRE PENINSULA DESALINATION PLANT

RO BUILDING

FACADES

PROJECT DRAWING NUMBER

EPDP-600-ACA-ARC-SKT-0001

A1 SHT SIZE | MAXIMO ID: | PROJECT No: | REVISION

TOTAL SHEETS: | DISCIPLINE:

SUPERSEDES:

DRAWING NUMBER

YEAR NUMBER SHEET

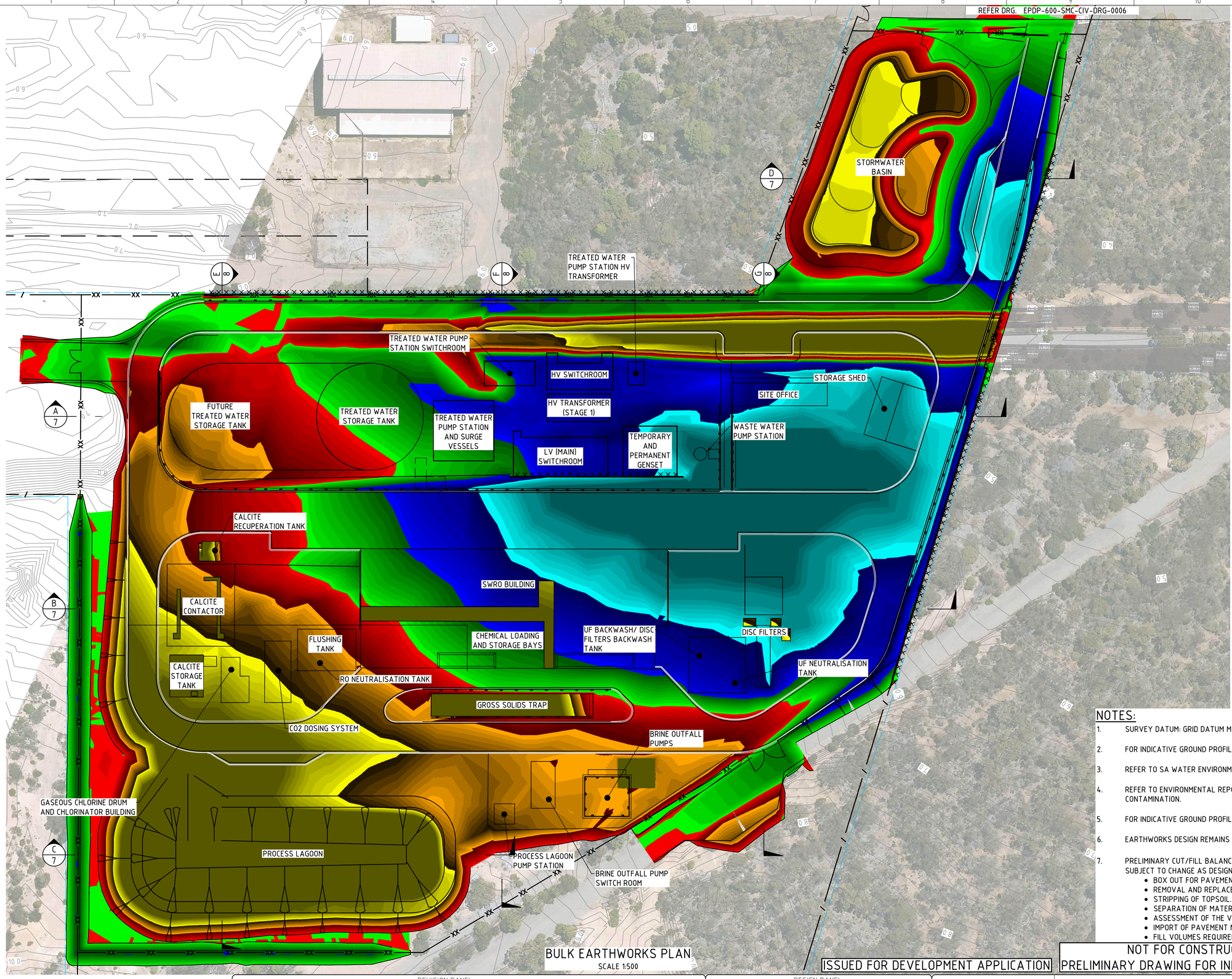

LEGEND:

- MAJOR CONTOURS
- MINOR CONTOURS
- EXISTING CONTOURS (PRINCIPAL SUPPLIED INFORMATION. REFERENCE DOC '94111-1-1-SV-T01-r0')
- PROPERTY BOUNDARY

DEPTH OF CUT

DEPTH RANGE DES vs EXST Lower_value		Upper_value		Colour
-300	to	-1.45	m	
-1.45	to	-1.40	m	
-1.40	to	-1.35	m	
-1.35	to	-1.30	m	
-1.30	to	-1.25	m	
-1.25	to	-1.20	m	
-1.20	to	-1.15	m	
-1.15	to	-1.10	m	
-1.10	to	-1.05	m	
-1.05	to	-1.00	m	
-1.00	to	-0.95	m	
-0.95	to	-0.90	m	
-0.90	to	-0.85	m	
-0.85	to	-0.80	m	
-0.80	to	-0.75	m	
-0.75	to	-0.70	m	
-0.70	to	-0.65	m	
-0.65	to	-0.60	m	
-0.60	to	-0.55	m	
-0.55	to	-0.50	m	
-0.50	to	-0.45	m	
-0.45	to	-0.40	m	
-0.40	to	-0.35	m	
-0.35	to	-0.30	m	
-0.30	to	-0.25	m	
-0.25	to	-0.20	m	
-0.20	to	-0.15	m	
-0.15	to	-0.10	m	
-0.10	to	-0.05	m	
-0.05	to	0	m	

DEPTH OF FILL

0	to	0.05	m	
0.05	to	0.10	m	
0.10	to	0.15	m	
0.15	to	0.20	m	
0.20	to	0.25	m	
0.25	to	0.30	m	
0.30	to	0.35	m	
0.35	to	0.40	m	
0.40	to	0.45	m	
0.45	to	0.50	m	
0.50	to	0.55	m	
0.55	to	0.60	m	
0.60	to	0.65	m	
0.65	to	0.70	m	
0.70	to	0.75	m	
0.75	to	0.80	m	
0.80	to	0.85	m	
0.85	to	0.90	m	
0.90	to	0.95	m	
0.95	to	1.00	m	
1.00	to	1.05	m	
1.05	to	1.10	m	
1.10	to	1.15	m	
1.15	to	1.20	m	
1.20	to	1.25	m	
1.25	to	1.30	m	
1.30	to	1.45	m	
1.45	to	1.50	m	
1.50	to	1.55	m	
1.55	to	300	m	

NOTES:

1. SURVEY DATUM: GRID DATUM MGA2020, AUSTRALIAN HEIGHT DATUM.
2. FOR INDICATIVE GROUND PROFILES, REFER TO GEOTECHNICAL INTERPRETATIVE REPORT,WSP, MAY 2023.
3. REFER TO SA WATER ENVIRONMENTAL SERVICES GROUP FOR APPROVALS PRIOR TO ANY VEGETATION REMOVAL.
4. REFER TO ENVIRONMENTAL REPORTS FOR ANY REQUIREMENTS WITH RESPECT TO HANDLING ANY POTENTIAL SITE CONTAMINATION.
5. FOR INDICATIVE GROUND PROFILES REFER TO GEOTECHNICAL INTERPRETATIVE REPORT, WSP, MAY 2023.
6. EARTHWORKS DESIGN REMAINS SUBJECT TO FURTHER GEOTECHNICAL SITE INVESTIGATIONS.
7. PRELIMINARY CUT/FILL BALANCE VOLUMES ARE CUT 21950m^3, FILL 15050m^3. NOTE THAT THESE VOLUMES REMAIN SUBJECT TO CHANGE AS DESIGN IS FURTHER DEVELOPED, AND OTHER FACTORS ARE INCORPORATED, INCLUDING:
   - BOX OUT FOR PAVEMENTS, FOOTINGS AND PIPELINES.
   - REMOVAL AND REPLACEMENT OF SUBGRADE TO PROVIDE SUITABLE FOUNDING CONDITIONS.
   - STRIPPING OF TOPSOIL.
   - SEPARATION OF MATERIALS UNSUITABLE FOR REUSE AS FILL.
   - ASSESSMENT OF THE VIABILITY OF CRUSHING AND REUSE OF EXCAVATED CALCRETE.
   - IMPORT OF PAVEMENT MATERIALS AND BEDDING SAND TO THE RELEVANT MATERIAL SPECIFICATIONS.
   - FILL VOLUMES REQUIRED TO OTHER PARTS OF THE PROJECT.

BULK EARTHWORKS PLAN

SCALE 1:500

ISSUED FOR DEVELOPMENT APPLICATION

NOT FOR CONSTRUCTION
PRELIMINARY DRAWING FOR INFORMATION ONLY

SCALE 1:500 5 0 10 20

REVISION PANEL

REV	DATE	DRN	DETAILS	APR'D
UR2	10.05.2024	KWS	UNDER REVISION	
UR1	12.04.2024		UNDER REVISION	

CURRENT REVISION CONTRACTOR:

CURRENT REV AUTHORISED

SIGNATURE

DESIGN PANEL

DESIGNED
DRAWN
REVIEWED
CONTRACTOR:

AUTHORISED
SIGNATURE

Government of South Australia
SA Water

This drawing is the property of the SOUTH AUSTRALIAN WATER CORPORATION and shall not be copied or modified in part or in whole without authorization.

EYRE PENINSULA DESALINATION PLANT
EX BHP - BILLY LIGHTS POINT
DESALINATION PLANT
BULK EARTHWORKS PLAN
PLANT

PROJECT DRAWING NUMBER
EPDP-600-SMC-CIV-DRG-0005

A1 SHT SIZE
MAXIMO ID: P041915
PROJECT No: A0012-0025
UR2 REVISION
TOTAL SHEETS:
DISCIPLINE:
SUPERSEDES:
DRAWING NUMBER
YEAR NUMBER SHEET

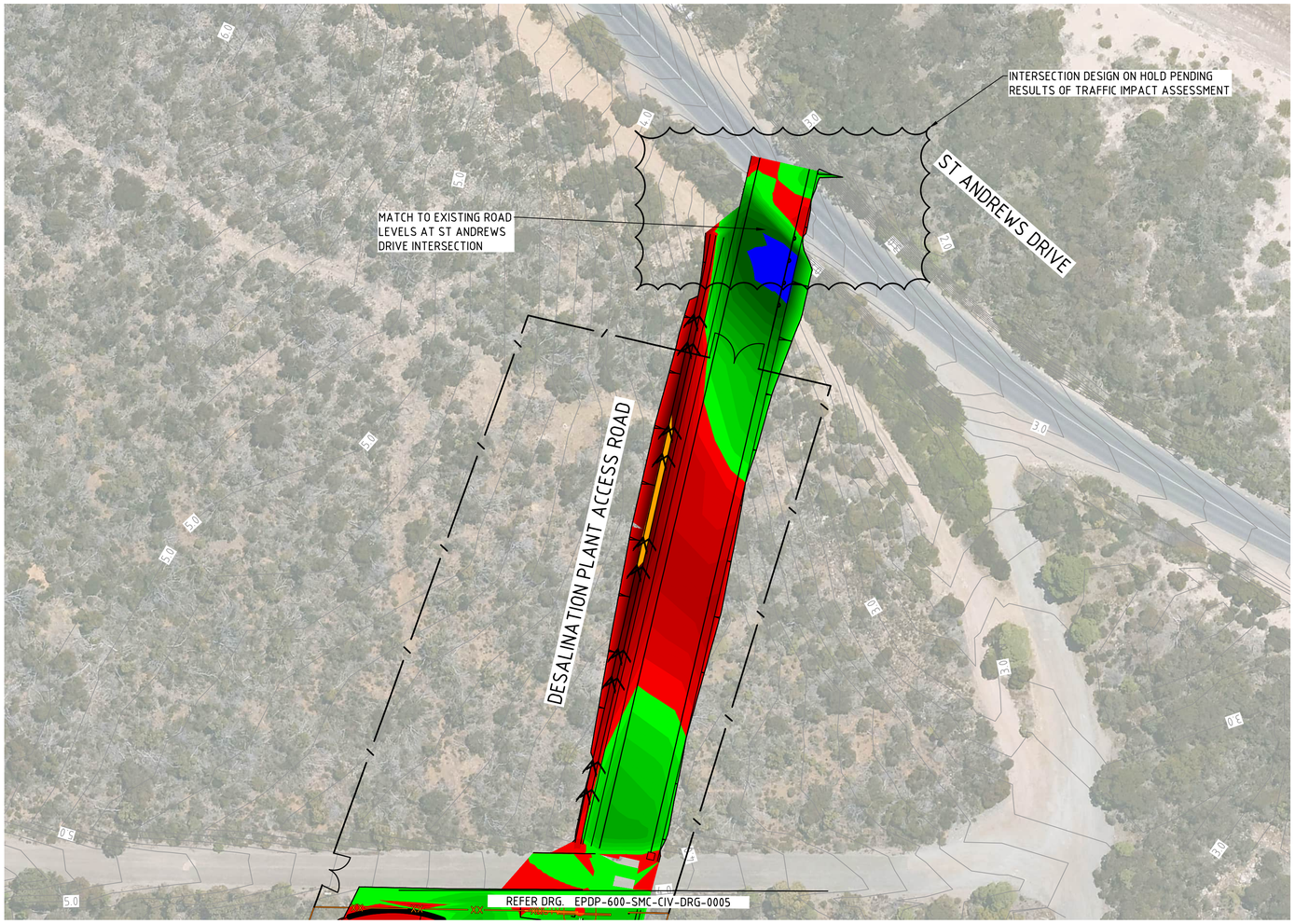

BULK EARTHWORKS PLAN

SCALE 1:500

DEPTH OF CUT

DEPTH RANGE DES vs EXST Lower_value		Upper_value		Colour
-300	to	-1.45	m	
-1.45	to	-1.40	m	
-1.40	to	-1.35	m	
-1.35	to	-1.30	m	
-1.30	to	-1.25	m	
-1.25	to	-1.20	m	
-1.20	to	-1.15	m	
-1.15	to	-1.10	m	
-1.10	to	-1.05	m	
-1.05	to	-1.00	m	
-1.00	to	-0.95	m	
-0.95	to	-0.90	m	
-0.90	to	-0.85	m	
-0.85	to	-0.80	m	
-0.80	to	-0.75	m	
-0.75	to	-0.70	m	
-0.70	to	-0.65	m	
-0.65	to	-0.60	m	
-0.60	to	-0.55	m	
-0.55	to	-0.50	m	
-0.50	to	-0.45	m	
-0.45	to	-0.40	m	
-0.40	to	-0.35	m	
-0.35	to	-0.30	m	
-0.30	to	-0.25	m	
-0.25	to	-0.20	m	
-0.20	to	-0.15	m	
-0.15	to	-0.10	m	
-0.10	to	-0.05	m	
-0.05	to	0	m	

DEPTH OF FILL

0	to	0.05	m	
0.05	to	0.10	m	
0.10	to	0.15	m	
0.15	to	0.20	m	
0.20	to	0.25	m	
0.25	to	0.30	m	
0.30	to	0.35	m	
0.35	to	0.40	m	
0.40	to	0.45	m	
0.45	to	0.50	m	
0.50	to	0.55	m	
0.55	to	0.60	m	
0.60	to	0.65	m	
0.65	to	0.70	m	
0.70	to	0.75	m	
0.75	to	0.80	m	
0.80	to	0.85	m	
0.85	to	0.90	m	
0.90	to	0.95	m	
0.95	to	1.00	m	
1.00	to	1.05	m	
1.05	to	1.10	m	
1.10	to	1.15	m	
1.15	to	1.20	m	
1.20	to	1.25	m	
1.25	to	1.30	m	
1.30	to	1.45	m	
1.45	to	1.50	m	
1.50	to	1.55	m	
1.55	to	300	m	

LEGEND:

EXISTING CONTOURS (PRINCIPAL SUPPLIED INFORMATION. REFERENCE DOC '94111-1-1-SV-T01-r0')

PROPERTY BOUNDARY

NOTES:

1. SURVEY DATUM: GRID DATUM MGA2020, AUSTRALIAN HEIGHT DATUM.
2. FOR INDICATIVE GROUND PROFILES, REFER TO GEOTECHNICAL INTERPRETATIVE REPORT,WSP, MAY 2023.
3. REFER TO SA WATER ENVIRONMENTAL SERVICES GROUP FOR APPROVALS PRIOR TO ANY VEGETATION REMOVAL.
4. REFER TO ENVIRONMENTAL REPORTS FOR ANY REQUIREMENTS WITH RESPECT TO HANDLING ANY POTENTIAL SITE CONTAMINATION.
5. FOR INDICATIVE GROUND PROFILES REFER TO GEOTECHNICAL INTERPRETATIVE REPORT, WSP, MAY 2023.
6. EARTHWORKS DESIGN REMAINS SUBJECT TO FURTHER GEOTECHNICAL SITE INVESTIGATIONS.
7. PRELIMINARY CUT/FILL BALANCE VOLUMES ARE CUT 22,200m3, FILL 14,900m3. NOTE THAT THESE VOLUMES REMAIN SUBJECT TO CHANGE AS DESIGN IS FURTHER DEVELOPED, AND OTHER FACTORS ARE INCORPORATED, INCLUDING:
   - BOX OUT FOR PAVEMENTS, FOOTINGS AND PIPELINES.
   - REMOVAL AND REPLACEMENT OF SUBGRADE TO PROVIDE SUITABLE FOUNDING CONDITIONS.
   - STRIPPING OF TOPSOIL.
   - SEPARATION OF MATERIALS UNSUITABLE FOR REUSE AS FILL.
   - ASSESSMENT OF THE VIABILITY OF CRUSHING AND REUSE OF EXCAVATED CALCRETE.
   - IMPORT OF PAVEMENT MATERIALS AND BEDDING SAND TO THE RELEVANT MATERIAL SPECIFICATIONS.
   - FILL VOLUMES REQUIRED TO OTHER PARTS OF THE PROJECT.

SCALE 1:500 5 0 10 20

ISSUED FOR DEVELOPMENT APPLICATION

NOT FOR CONSTRUCTION
PRELIMINARY DRAWING FOR INFORMATION ONLY

REVISION PANEL

REV	DATE	DRN	DETAILS	APR'D
UR2	10.05.2024	KWS	UNDER REVISION	
UR1	12.04.2024		UNDER REVISION	

CURRENT REVISION CONTRACTOR:

CURRENT REV AUTHORISED

SIGNATURE

DESIGN PANEL

DESIGNED
DRAWN
REVIEWED
CONTRACTOR:
AUTHORISED
SIGNATURE

Government of South Australia
SA Water

This drawing is the property of the SOUTH AUSTRALIAN WATER CORPORATION and shall not be copied or modified in part or in whole without authorization.

EYRE PENINSULA DESALINATION PLANT
EX BHP - BILLY LIGHTS POINT
DESALINATION PLANT
BULK EARTHWORKS PLAN
ACCESS ROAD

PROJECT DRAWING NUMBER
EPDP-600-SMC-CIV-DRG-0006

A1 SHT SIZE
MAXIMO ID: P041915
PROJECT No: A0012-0025
UR2 REVISION
TOTAL SHEETS:
DISCIPLINE: CIVIL
SUPERSEDES:
DRAWING NUMBER
YEAR NUMBER SHEET

LEGEND:

CUT

FILL

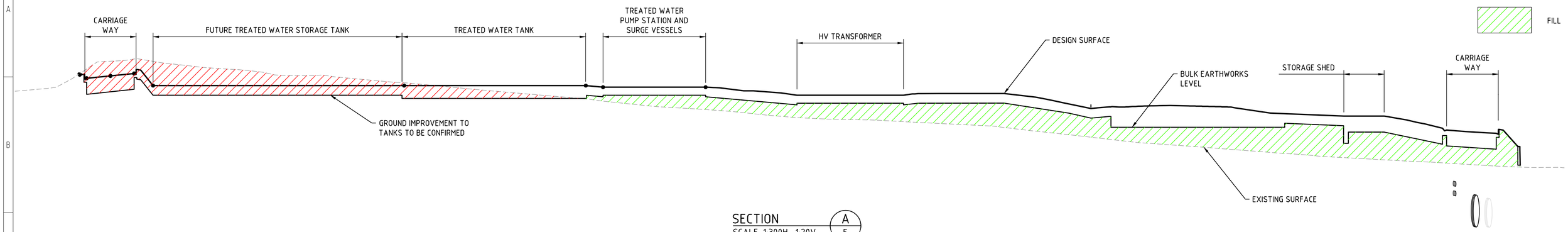

SECTION A 5
SCALE 1:300H, 1:20V

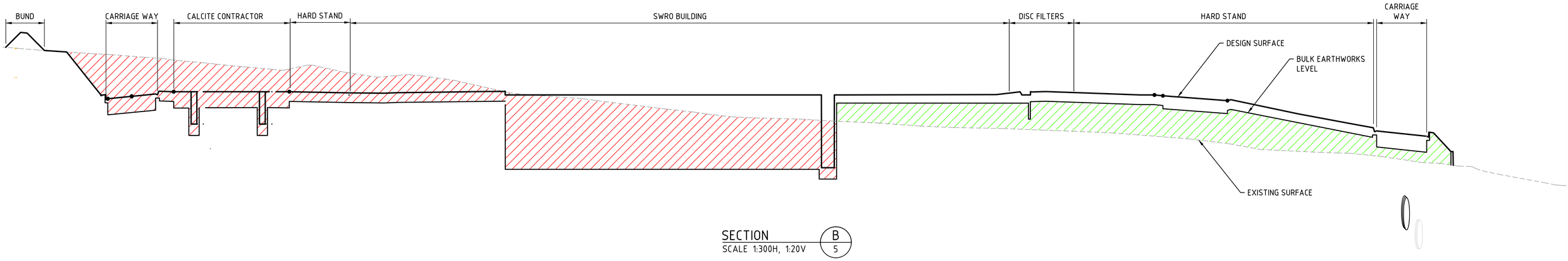

SECTION B 5
SCALE 1:300H, 1:20V

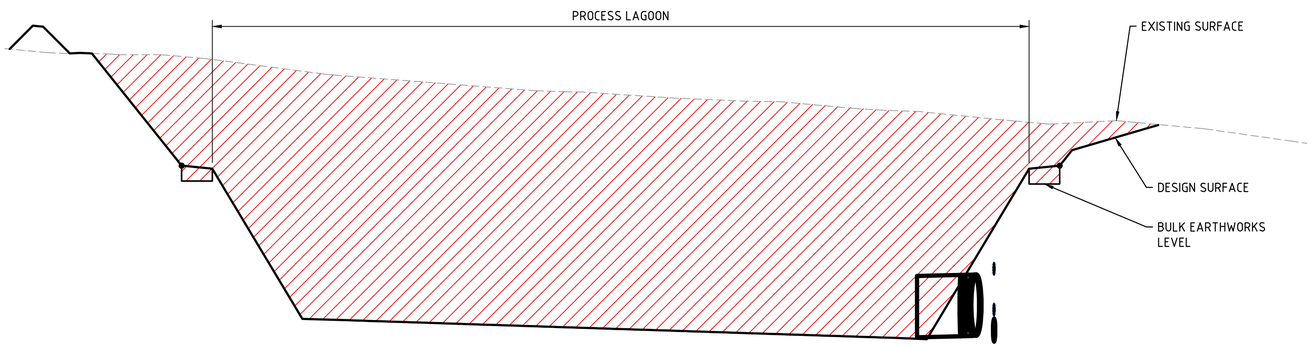

SECTION C 5
SCALE 1:300H, 1:20V

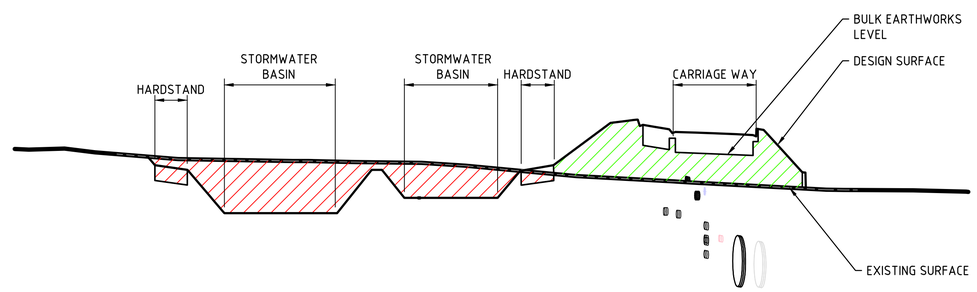

SECTION D 5
SCALE 1:300H, 1:20V

SCALE 1:300 3 0 3 6 9 12 15

SCALE 1:20 0.2 0 0.2 0.4 0.6 0.8 1.0

ISSUED FOR DEVELOPMENT APPLICATION

NOT FOR CONSTRUCTION
PRELIMINARY DRAWING FOR INFORMATION ONLY

REVISION PANEL

REV	DATE	DRN	DETAILS	APR'D
UR2	10.05.2024	KWS	UNDER REVISION	
UR1	12.04.2024		UNDER REVISION	

CURRENT REVISION CONTRACTOR:

CURRENT REV AUTHORISED

SIGNATURE

DESIGN PANEL

DESIGNED	AUTHORISED
DRAWN	SIGNATURE
REVIEWED	
CONTRACTOR:	

Government of South Australia

SA Water

This drawing is the property of the SOUTH AUSTRALIAN WATER CORPORATION and shall not be copied or modified in part or in whole without authorization.

EYRE PENINSULA DESALINATION PLANT
EX BHP - BILLY LIGHTS POINT
DESALINATION PLANT
BULK EARTHWORKS
TYPICAL SECTIONS

PROJECT DRAWING NUMBER
EPDP-600-SMC-CIV-DRG-0007

A1 SHT SIZE

MAXIMO ID: P041915

PROJECT No: A0012-0025

UR2 REVISION

TOTAL SHEETS:

DISCIPLINE:

SUPERSEDES:

DRAWING NUMBER

YEAR NUMBER SHEET

LEGEND:

CUT

FILL

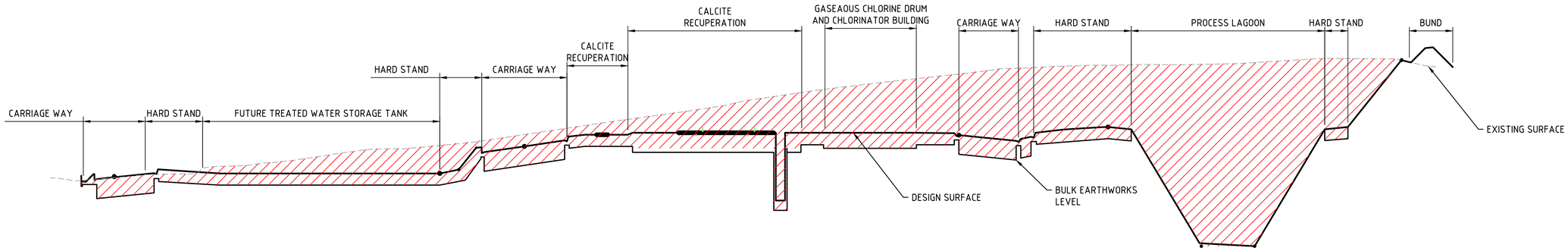

SECTION E / 5
NOT TO SCALE

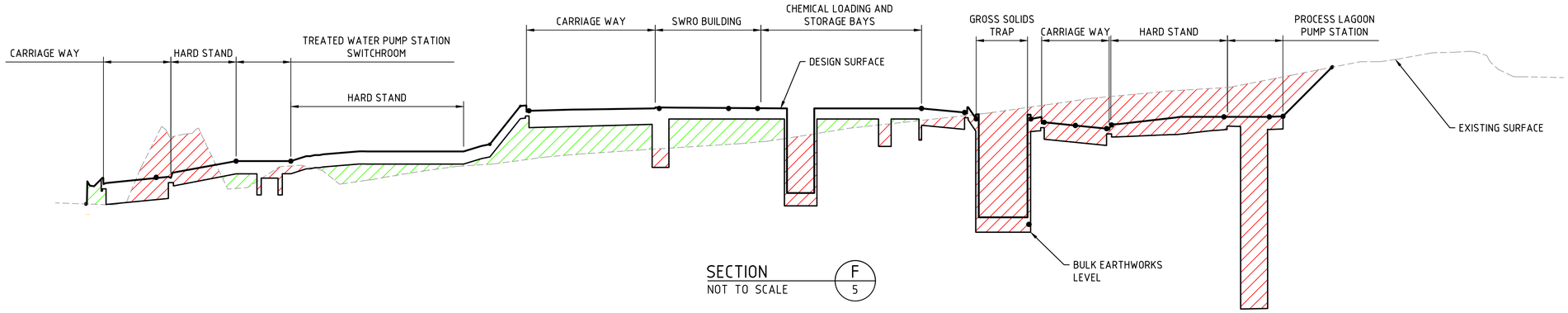

SECTION F / 5
NOT TO SCALE

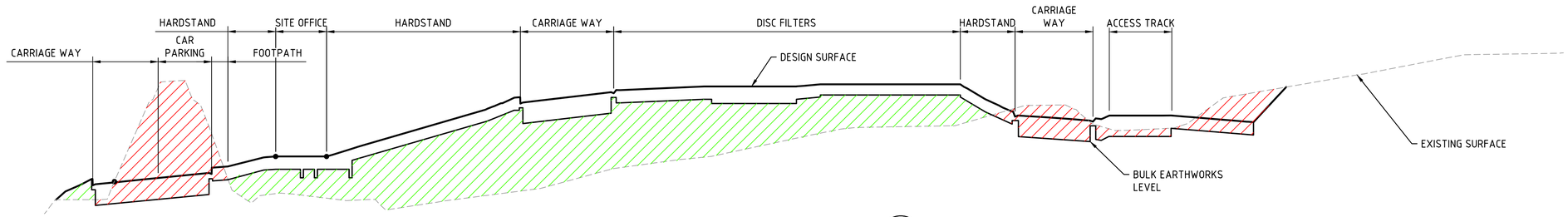

SECTION G / 5
NOT TO SCALE

SCALE 1:300 — 3 0 3 6 9 12 15

SCALE 1:20 — 0.2 0 0.2 0.4 0.6 0.8 1.0

ISSUED FOR DEVELOPMENT APPLICATION

NOT FOR CONSTRUCTION
PRELIMINARY DRAWING FOR INFORMATION ONLY

REVISION PANEL

REV	DATE	DRN	DETAILS	APR'D
UR2	10.05.2024	KWS	UNDER REVISION	
UR1	12.04.2024		UNDER REVISION	

CURRENT REVISION CONTRACTOR:

CURRENT REV AUTHORISED

SIGNATURE

DESIGN PANEL

DESIGNED	AUTHORISED
DRAWN	SIGNATURE
REVIEWED	
CONTRACTOR:	

Government of South Australia

SA Water

This drawing is the property of the SOUTH AUSTRALIAN WATER CORPORATION and shall not be copied or modified in part or in whole without authorization.

EYRE PENINSULA DESALINATION PLANT
EX BHP - BILLY LIGHTS POINT
DESALINATION PLANT
BULK EARTHWORKS
TYPICAL SECTIONS

PROJECT DRAWING NUMBER
EPDP-600-SMC-CIV-DRG-0008

A1 — SHT SIZE
MAXIMO ID: P041915
PROJECT No: A0012-0025
UR2 — REVISION

TOTAL SHEETS:
DISCIPLINE:
SUPERSEDES:
DRAWING NUMBER
YEAR NUMBER SHEET

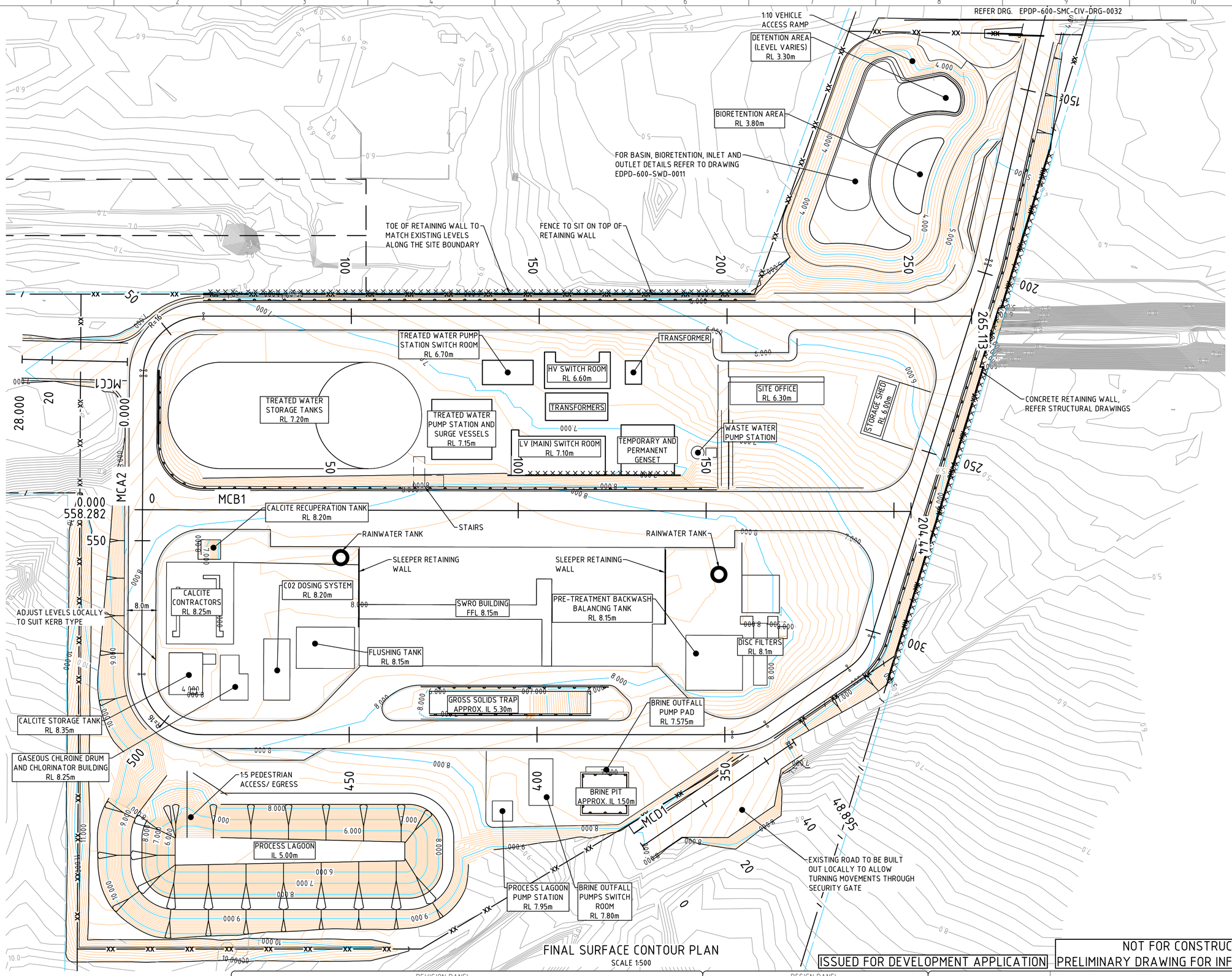

FINAL SURFACE CONTOUR PLAN

SCALE 1:500

LEGEND:

1.0	MAJOR CONTOURS
	MINOR CONTOURS
1.0	EXISTING MAJOR CONTOURS
	EXISTING MINOR CONTOURS
xxxxxxxxxx	RETAINING WALL
	PROPERTY BOUNDARY
FFL	FINISHED FLOOR LEVEL
RL	RELATIVE LEVEL AT GRADE AROUND STRUCTURE
IL	INVERT LEVEL

NOTES:

1. SURVEY DATUM: GRID DATUM MGA2020, AUSTRALIAN HEIGHT DATUM.
2. EXISTING CONTOURS INFORMATION SUPPLIED BY PRINCIPAL. REFERENCE DOC '94111-1-1-SV-T01-r0'.
3. THE CONTOURS PRESENTED ON THIS DRAWING REPRESENT FINISHED SURFACE LEVELS. BOX OUT FOR PAVEMENT FORMATION, STRUCTURAL FOOTINGS AND ANY GROUND IMPROVEMENT WORKS ARE NOT SHOWN. SUBGRADE SURFACE TO BE GRADED AS REQUIRED TO AVOID TRAPPING OF STORMWATER.
4. MAJOR CONTOUR INTERVALS SHOWN EVERY 0.5m, MINOR CONTOUR INTERVALS SHOWN EVERY 0.1m.
5. EXISTING MAJOR CONTOUR INTERVALS SHOWN EVERY 1.0m, EXISTING MINOR CONTOURS SHOWN EVERY 0.1m.
6. INTERNAL BATTER SLOPES 1:4 TYPICAL.
7. FOR SUBSOIL DRAINAGE, REFER TO DRAWING EPDP-600-SMC-CIV-DRG-0041.
8. REFER TO SA WATER ENVIRONMENTAL SERVICES GROUP FOR APPROVALS PRIOR TO ANY VEGETATION REMOVAL.
9. REFER TO ENVIRONMENTAL REPORTS FOR ANY REQUIREMENTS WITH RESPECT TO HANDLING ANY POTENTIAL SITE CONTAMINATION.
10. FOR INDICATIVE GROUND PROFILES, REFER TO GEOTECHNICAL INTERPRETATIVE REPORT,WSP, MAY 2023.
11. EARTHWORKS DESIGN RMAINS SUBJECT TO FURTHER GEOTECHNICAL SITE INVESTIGATIONS.
12. PRELIMINARY CUT/FILL BALANCE VOLUMES ARE CUT 22,200m3, FILL 14,900m3. NOTE THAT THESE VOLUMES REMAIN SUBJECT TO CHANGE AS DESIGN IS FURTHER DEVELOPED, AND OTHER FACTORS ARE INCORPORATED, INCLUDING:
    - BOX OUT FOR PAVEMENTS, FOOTINGS AND PIPELINES.
    - REMOVAL AND REPLACEMENT OF SUBGRADE TO PROVIDE SUITABLE FOUNDING CONDITIONS.
    - STRIPPING OF TOPSOIL.
    - SEPARATION OF MATERIALS UNSUITABLE FOR REUSE AS FILL.
    - ASSESSMENT OF THE VIABILITY OF CRUSHING AND REUSE OF EXCAVATED CALCRETE.
    - IMPORT OF PAVEMENT MATERIALS AND BEDDING SAND TO THE RELEVANT MATERIAL SPECIFICATIONS.
    - FILL VOLUMES REQUIRED TO OTHER PARTS OF THE PROJECT.
13. LOCALLY GRADE PAVEMENT AT BUILDING DOORWAYS DOWN TO MATCH SURROUNDING PAVEMENT AND SETDOWN LEVELS.
14. GRADE AWAY FROM BUILDINGS AT 2.0% MINIMUM GRADE UNLESS NOTED OTHERWISE.
15. SETDOWN FROM FFL TO BUILDING SURROUNDS VARIES TO SUIT SITE GRADING AND BUILDING ACCESS REQUIREMENTS.
16. ALL PEDESTRIAN PATHS AND TRANSITIONS SHALL BE DDA COMPLIANT.
17. FOR DDA, ENSURE TRANSITIONS BETWEEN DIFFERENT SURFACE TREATMENTS ACCESSIBLE BY PEDESTRIANS ARE NOT GREATER THAN 3.0mm.

ISSUED FOR DEVELOPMENT APPLICATION

NOT FOR CONSTRUCTION
PRELIMINARY DRAWING FOR INFORMATION ONLY

PROJECT DRAWING NUMBER
EPDP-600-SMC-CIV-DRG-0031

SCALE 1:500 5 0 10 20

REVISION PANEL

REV	DATE	DRN	DETAILS	APR'D
UR2	10.05.2024	KWS	UNDER REVISION	
UR1	12.04.2024		UNDER REVISION	

CURRENT REVISION CONTRACTOR:

CURRENT REV AUTHORISED

SIGNATURE

DESIGN PANEL

DESIGNED
DRAWN
REVIEWED
CONTRACTOR:
AUTHORISED
SIGNATURE

Government of South Australia
SA Water

This drawing is the property of the SOUTH AUSTRALIAN WATER CORPORATION and shall not be copied or modified in part or in whole without authorization.

EYRE PENINSULA DESALINATION PLANT
EX BHP - BILLY LIGHTS POINT
DESALINATION PLANT
FINAL SURFACE CONTOURS
PLANT

A1 SHT SIZE
MAXIMO ID: P041915
PROJECT No: A0012-0025
UR2 REVISION
TOTAL SHEETS:
DISCIPLINE: CIVIL
SUPERSEDES:
DRAWING NUMBER
YEAR NUMBER SHEET

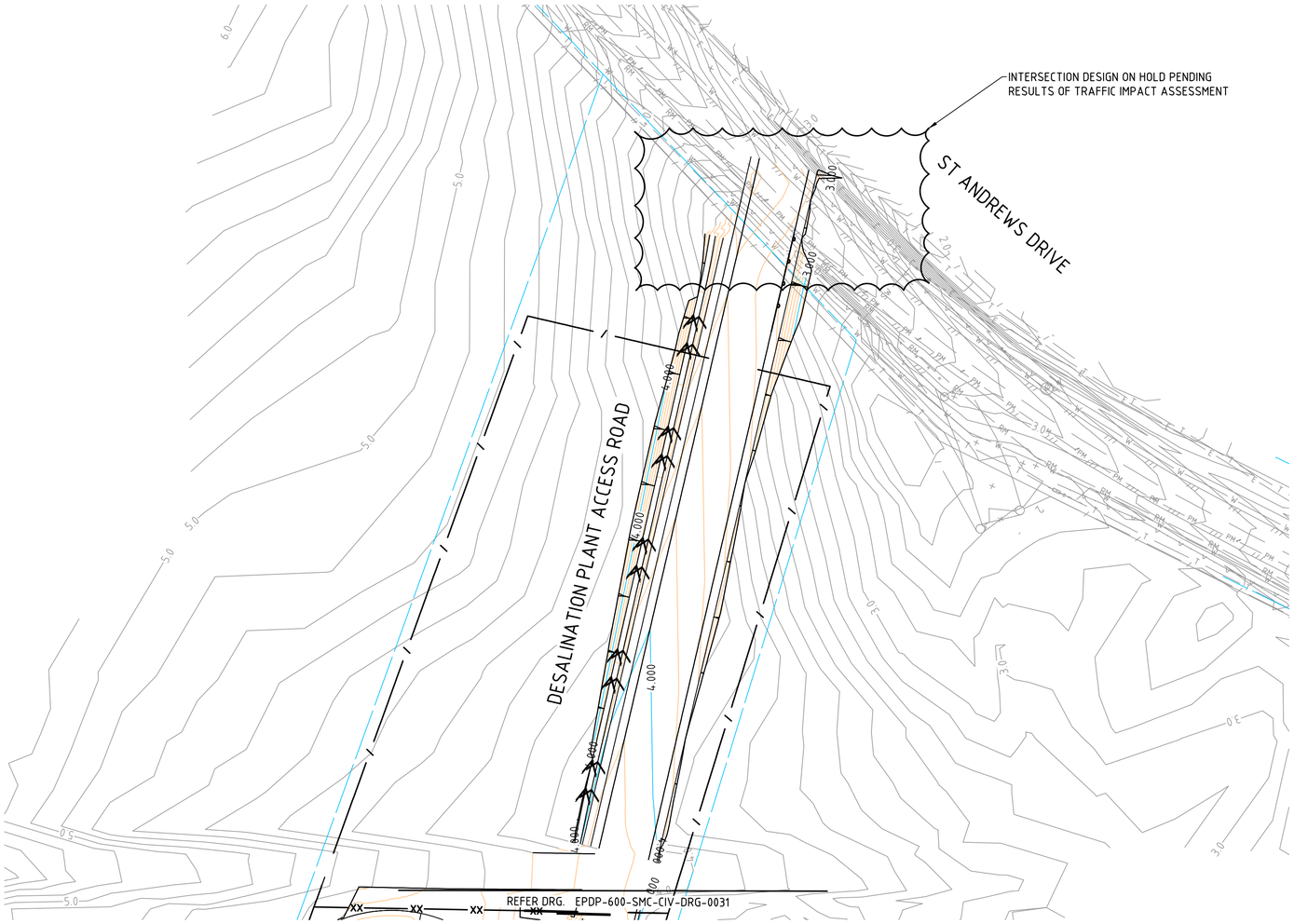

FINAL SURFACE CONTOUR PLAN

SCALE 1:500

LEGEND:

- MAJOR CONTOURS
- MINOR CONTOURS
- EXISTING MAJOR CONTOURS
- EXISTING MINOR CONTOURS
- PROPERTY BOUNDARY

NOTES:

1. SURVEY DATUM: GRID DATUM MGA2020, AUSTRALIAN HEIGHT DATUM.
2. EXISTING CONTOURS INFORMATION SUPPLIED BY PRINCIPAL. REFERENCE DOC '94111-1-1-SV-T01-r0'.
3. THE CONTOURS PRESENTED ON THIS DRAWING REPRESENT FINISHED SURFACE LEVELS. BOX OUT FOR PAVEMENT FORMATION, STRUCTURAL FOOTINGS AND ANY GROUND IMPROVEMENT WORKS ARE NOT SHOWN. SUBGRADE SURFACE TO BE GRADED AS REQUIRED TO AVOID TRAPPING OF STORMWATER.
4. MAJOR CONTOUR INTERVALS SHOWN EVERY 0.5m, MINOR CONTOUR INTERVALS SHOWN EVERY 0.1m.
5. EXISTING MAJOR CONTOUR INTERVALS SHOWN EVERY 1.0m, EXISTING MINOR CONTOURS SHOWN EVERY 0.1m.
6. INTERNAL BATTER SLOPES 1:4 TYPICAL.
7. FOR SUBSOIL DRAINAGE, REFER TO DRAWING EPDP-600-SMC-SWD-DRG-0020.
8. REFER TO SA WATER ENVIRONMENTAL SERVICES GROUP FOR APPROVALS PRIOR TO ANY VEGETATION REMOVAL.
9. REFER TO ENVIRONMENTAL REPORTS FOR ANY REQUIREMENTS WITH RESPECT TO HANDLING ANY POTENTIAL SITE CONTAMINATION.
10. FOR INDICATIVE GROUND PROFILES, REFER TO GEOTECHNICAL INTERPRETATIVE REPORT,WSP, MAY 2023.
11. EARTHWORKS DESIGN RMAINS SUBJECT TO FURTHER GEOTECHNICAL SITE INVESTIGATIONS.
12. PRELIMINARY CUT/FILL BALANCE VOLUMES ARE CUT 22,200m3, FILL 14,900m3. NOTE THAT THESE VOLUMES REMAIN SUBJECT TO CHANGE AS DESIGN IS FURTHER DEVELOPED, AND OTHER FACTORS ARE INCORPORATED, INCLUDING:
    - BOX OUT FOR PAVEMENTS, FOOTINGS AND PIPELINES.
    - REMOVAL AND REPLACEMENT OF SUBGRADE TO PROVIDE SUITABLE FOUNDING CONDITIONS.
    - STRIPPING OF TOPSOIL.
    - SEPARATION OF MATERIALS UNSUITABLE FOR REUSE AS FILL.
    - ASSESSMENT OF THE VIABILITY OF CRUSHING AND REUSE OF EXCAVATED CALCRETE.
    - IMPORT OF PAVEMENT MATERIALS AND BEDDING SAND TO THE RELEVANT MATERIAL SPECIFICATIONS.
    - FILL VOLUMES REQUIRED TO OTHER PARTS OF THE PROJECT.
13. LOCALLY GRADE PAVEMENT AT BUILDING DOORWAYS DOWN TO MATCH SURROUNDING PAVEMENT AND SETDOWN LEVELS.
14. GRADE AWAY FROM BUILDINGS AT 2.0% MINIMUM GRADE UNLESS NOTED OTHERWISE.
15. SETDOWN FROM FFL TO BUILDING SURROUNDS VARIES TO SUIT SITE GRADING AND BUILDING ACCESS REQUIREMENTS.
16. ALL PEDESTRIAN PATHS AND TRANSITIONS SHALL BE DDA COMPLIANT.
17. FOR DDA, ENSURE TRANSITIONS BETWEEN DIFFERENT SURFACE TREATMENTS ACCESSIBLE BY PEDESTRIANS ARE NOT GREATER THAN 3.0mm.

SCALE 1:500 5 0 10 20

ISSUED FOR DEVELOPMENT APPLICATION

NOT FOR CONSTRUCTION
PRELIMINARY DRAWING FOR INFORMATION ONLY

REVISION PANEL

REV	DATE	DRN	DETAILS	APR'D
UR2	10.05.2024	KWS	UNDER REVISION	
UR1	12.04.2024		UNDER REVISION	

CURRENT REVISION CONTRACTOR:

CURRENT REV AUTHORISED

SIGNATURE

DESIGN PANEL

DESIGNED	AUTHORISED
DRAWN	SIGNATURE
REVIEWED	

CONTRACTOR:

Government of South Australia

SA Water

This drawing is the property of the SOUTH AUSTRALIAN WATER CORPORATION and shall not be copied or modified in part or in whole without authorization.

EYRE PENINSULA DESALINATION PLANT
EX BHP - BILLY LIGHTS POINT
DESALINATION PLANT
FINAL SURFACE CONTOURS
ACCESS ROAD

PROJECT DRAWING NUMBER
EPDP-600-SMC-CIV-DRG-0032

A1 SHT SIZE | MAXIMO ID: P041915 | PROJECT No: A0012-0025 | UR2 REVISION

TOTAL SHEETS: | DISCIPLINE: CIVIL

SUPERSEDES:

DRAWING NUMBER

YEAR NUMBER SHEET

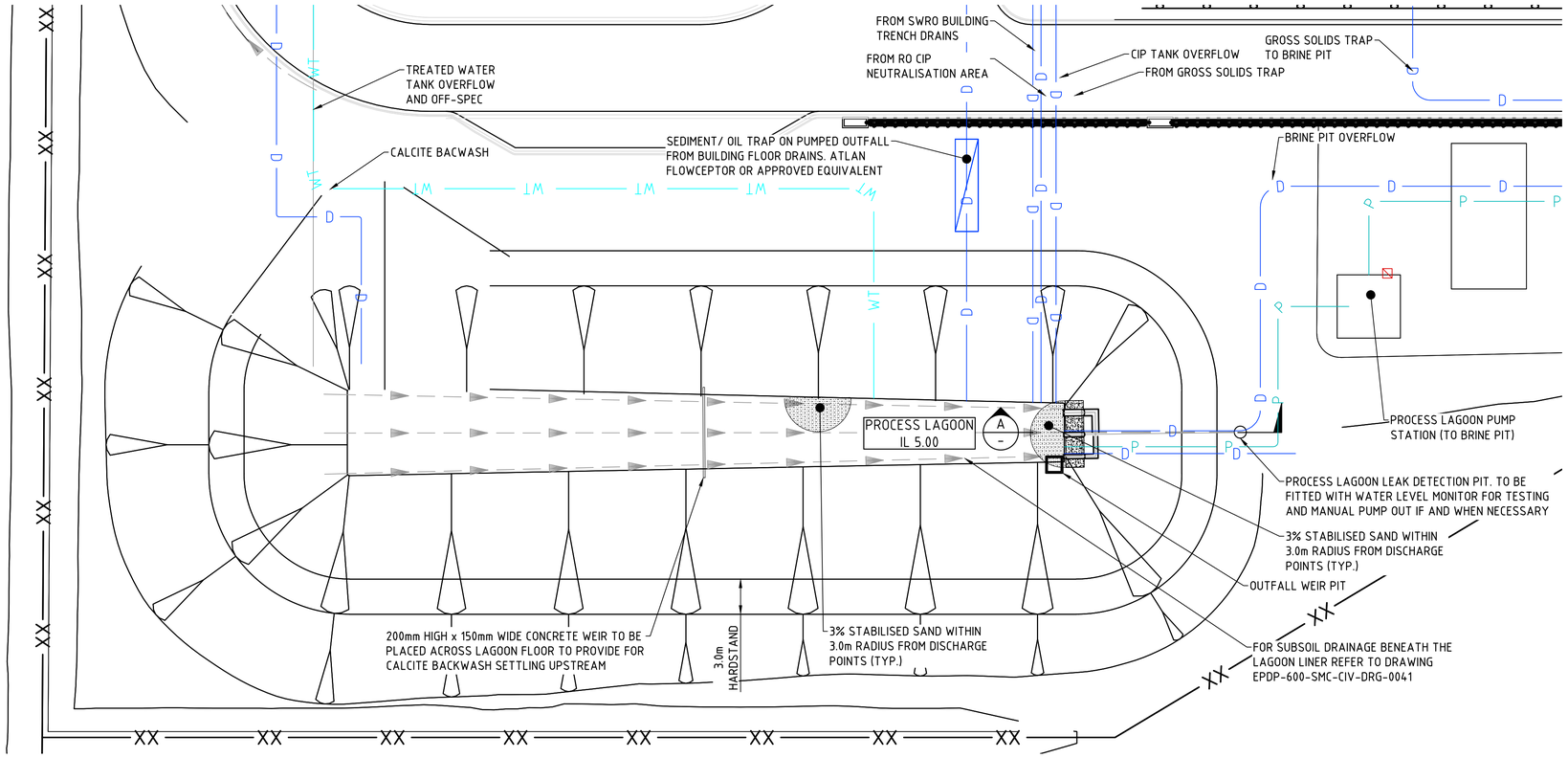

PROCESS LAGOON PLAN

SCALE 1:250

NOTES:

1. SURVEY DATUM: GRID DATUM MGA2020, AUSTRALIAN HEIGHT DATUM.
2. THE CONTOURS PRESENTED ON THIS DRAWING REPRESENT FINISHED SURFACE LEVELS. BOX OUT FOR PAVEMENT FORMATION, STRUCTURAL FOOTINGS AND ANY GROUND IMPROVEMENT WORKS ARE NOT SHOWN. SUBGRADE SURFACE TO BE GRADED AS REQUIRED TO AVOID TRAPPING OF STORMWATER.
3. PROCESS LAGOON SIZING REMAINS SUBJECT TO FURTHER DETAILING OF THE PROCESS PLANT AND CONFIRMATION OF WASTE STREAMS TO BRINE AND TO SEWER.
4. PROCESS LAGOON IS CURRENTLY SIZED FOR 2400m³.
5. 3.0m WIDE BERM AROUND PROCESS LAGOON FOR PERSONNEL ACCESS, WITH VEHICLE ACCESS UP TO EDGE OF LAGOON AVAILABLE ALONG THE NORTHERN SIDE.

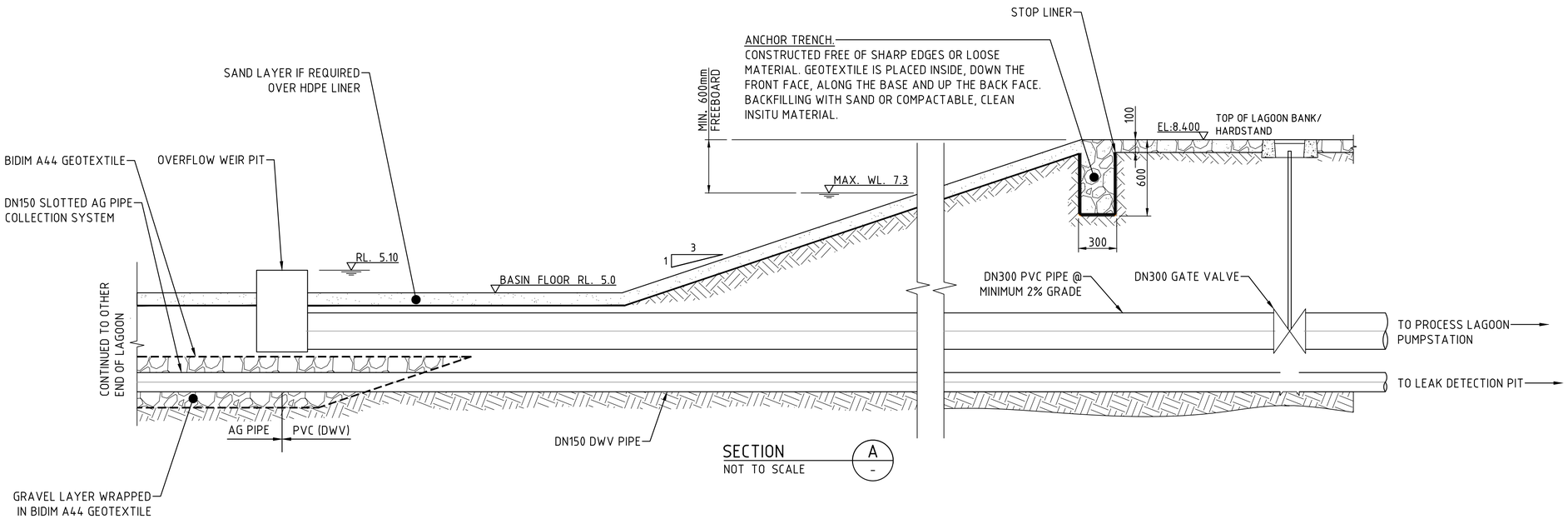

SECTION A

NOT TO SCALE

ISSUED FOR DEVELOPMENT APPLICATION

NOT FOR CONSTRUCTION
PRELIMINARY DRAWING FOR INFORMATION ONLY

PROJECT DRAWING NUMBER
EPDP-600-SMC-CIV-DRG-0051

SCALE 1:250 2.5 0 5 10

REVISION PANEL

REV	DATE	DRN	DETAILS	APR'D
UR2	10.05.2024	KWS	UNDER REVISION	
UR1	12.04.2024		UNDER REVISION	

CURRENT REVISION CONTRACTOR:

CURRENT REV AUTHORISED

SIGNATURE

DESIGN PANEL

DESIGNED | AUTHORISED
DRAWN | SIGNATURE
REVIEWED
CONTRACTOR:

Government of South Australia
SA Water

This drawing is the property of the SOUTH AUSTRALIAN WATER CORPORATION and shall not be copied or modified in part or in whole without authorization.

EYRE PENINSULA DESALINATION PLANT
EX BHP - BILLY LIGHTS POINT
DESALINATION PLANT
PROCESS LAGOON
PLANT

A1 SHT SIZE
MAXIMO ID: P041915
PROJECT No: A0012-0025
UR2 REVISION
TOTAL SHEETS:
DISCIPLINE: CIVIL
SUPERSEDES:
DRAWING NUMBER
YEAR NUMBER SHEET

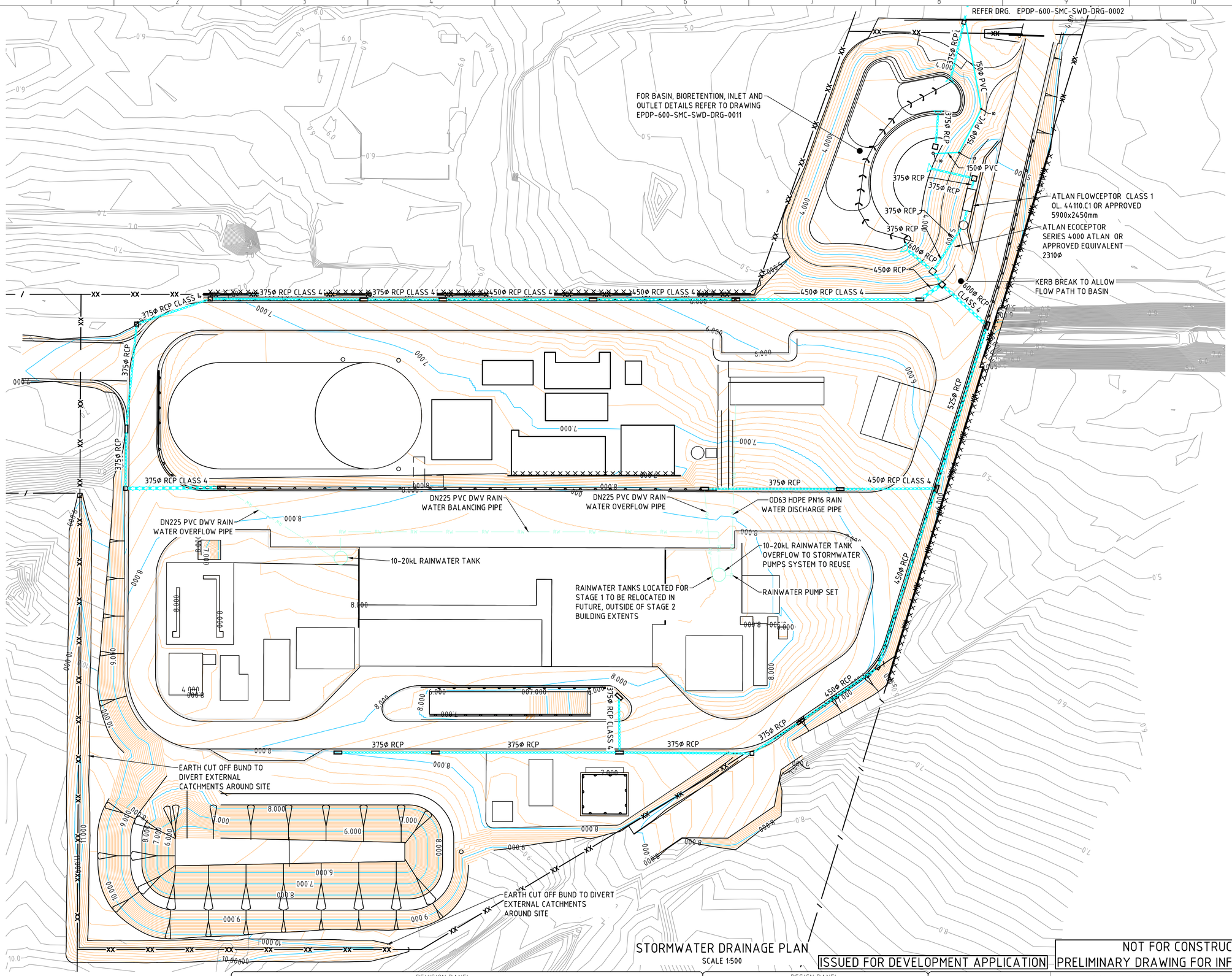

LEGEND:

450Ø RCP	DRAINAGE PIPE CLASS 3 UNLESS NOTED OTHERWISE
RW	RAIN WATER PIPE
	OVERFLOW PIPE FROM RAIN WATER TANK
	IN BASIN SWALE
	SWALE
	1800 DOUBLE SIDE ENTRY PIT
	FIELD GULLY PIT
	JUNCTION BOX
	HEADWALL

NOTES:

1. ALL CONCRETE PIPES AND STRUCTURES DOWNSTREAM OF BASIN TO BE MARINE GRADE.
2. ALL CONCRETE STORMWATER PIPES ARE TO BE RUBBER RING JOINTED.
3. ALL STORMWATER DRAINAGE STRUCTURES INCLUDING PITS AND HEADWALLS SHALL ADOPT A MINIMUM CONCRETE Fc' 40MPa.
4. DOWNPIPE CONNECTIONS (NOT SHOWN) ARE TO BE NOM 100-150 DIA (TBC) PVC @ 1.0% MINIMUM GRADE.
5. PIPEWORK CONNECTING RAINWATER TANKS IS SHOWN INDICATIVE ONLY. FINAL DETAILS AND CONFIGURATIONS TO BE DEVELOPED IN CONJUNCTION WITH BUILDING DETAILING.
6. ALL CONCRETE STORMWATER PIPES ARE TO BE RUBBER RING JOINTED.
7. ALL STORMWATER DRAINAGE STRUCTURES INCLUDING PITS AND HEADWALLS SHALL ADOPT A MINIMUM CONCRETE Fc' 40MPa.
8. DOWNPIPE CONNECTIONS (NOT SHOWN) ARE TO BE NOM 100-150 DIA (TBC) PVC @ 1.0% MINIMUM GRADE.
9. PIPEWORK CONNECTING RAINWATER TANKS IS SHOWN INDICATIVE ONLY. FINAL DETAILS AND CONFIGURATIONS TO BE DEVELOPED IN CONJUNCTION WITH BUILDING DETAILING.
10. ALL TRENCHES IN PLANT AREAS TO BE BACKFILLED USING TYPE HS2 SUPPORT CONDITION IN ACCORDANCE WITH AS3725.
11. ALL STORMWATER PIT COVERS TO BE TRAFFICABLE CLASS D UNLESS OTHERWISE NOTED.
12. WHERE RIP RAP IS SPECIFICED IT SHALL CONSIST WHOLLY OF HARD, DURABLE, DENSE AND NAUTURAL ROCK. ALL SOTNES SHALL BE WELL SHAPED WITH NO STONE HAVING A LENGTH MORE THAN 2.5 TIMES ITS BREADTH OR THICKNESS.
13. FOR RAIN WATER YARD SERVICE PIPE SIZES, REFER TO DRAWING EPDP-600-UUW-DRG-0006.

STORMWATER DRAINAGE PLAN

SCALE 1:500

ISSUED FOR DEVELOPMENT APPLICATION

NOT FOR CONSTRUCTION
PRELIMINARY DRAWING FOR INFORMATION ONLY

SCALE 1:500 5 0 10 20

REVISION PANEL				
REV	DATE	DRN	DETAILS	APR'D
UR2	10.05.2024	KWS	UNDER REVISION	
UR1	12.04.2024		UNDER REVISION	
CURRENT REVISION CONTRACTOR:				

CURRENT REV AUTHORISED

SIGNATURE

DESIGN PANEL	
DESIGNED	AUTHORISED
DRAWN	SIGNATURE
REVIEWED	
CONTRACTOR:	

Government of South Australia

SA Water

This drawing is the property of the SOUTH AUSTRALIAN WATER CORPORATION and shall not be copied or modified in part or in whole without authorization.

EYRE PENINSULA DESALINATION PLANT
EX BHP - BILLY LIGHTS POINT
DESALINATION PLANT
STORMWATER DRAINAGE
PLANT

PROJECT DRAWING NUMBER
EPDP-600-SMC-SWD-DRG-0001

A1 SHT SIZE | MAXIMO ID: P041915 | PROJECT No: A0012-0025 | UR2 REVISION

TOTAL SHEETS: | DISCIPLINE: CIVIL

SUPERSEDES:

DRAWING NUMBER

YEAR NUMBER SHEET

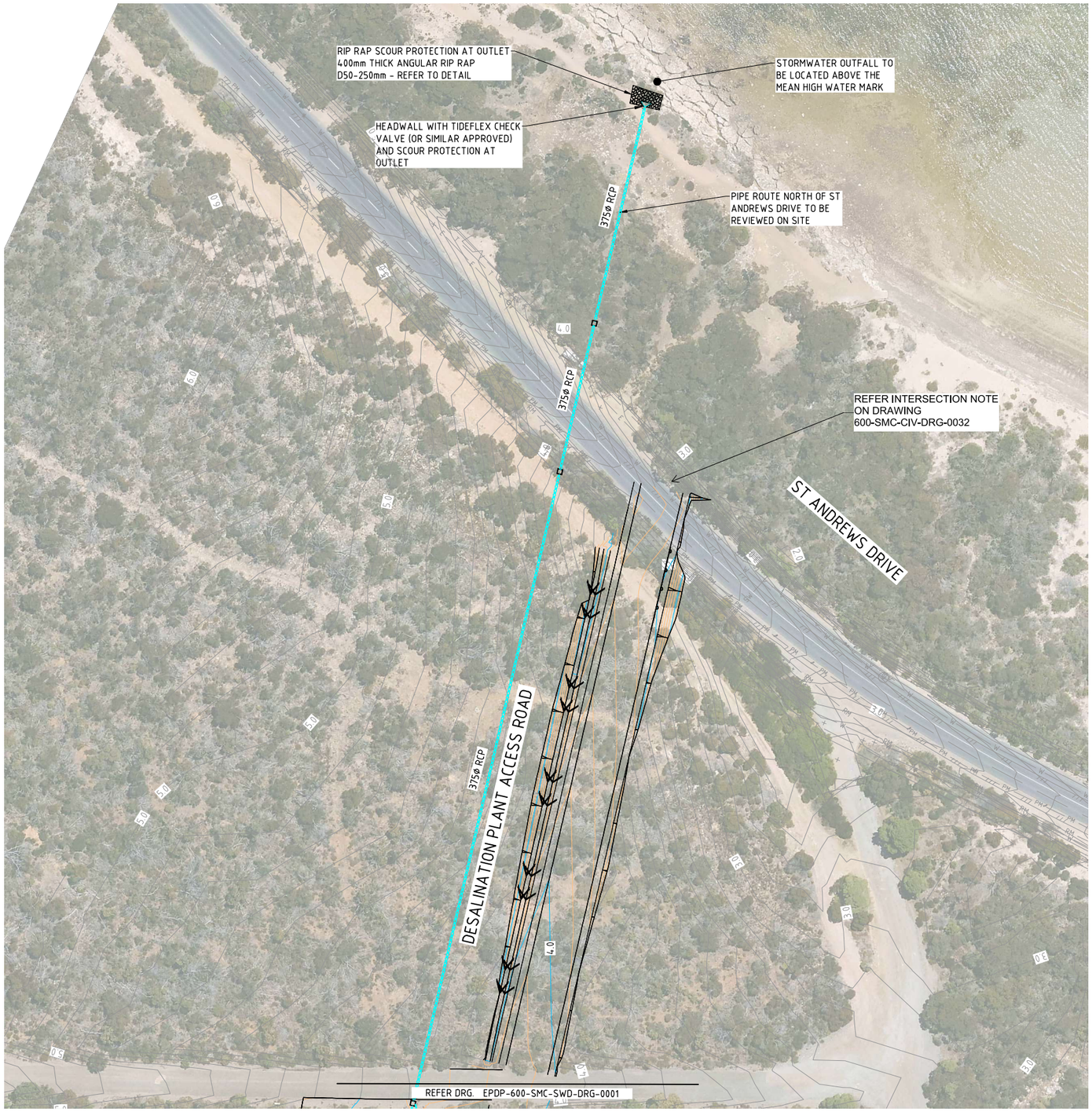

STORMWATER DRAINAGE PLAN
SCALE 1:500

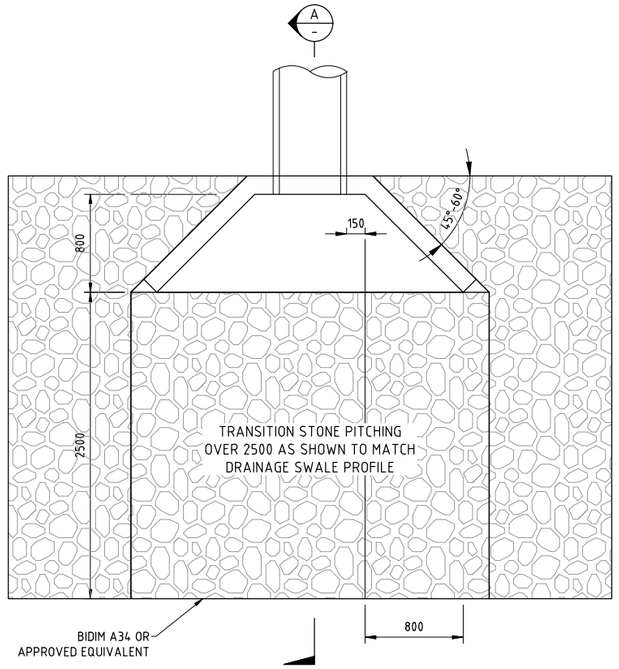

TYPICAL ROAD CULVERT ARRANGEMENT
SCALE 1:25

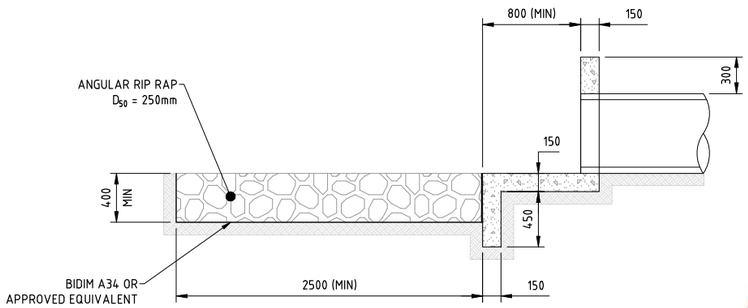

SECTION A
SCALE 1:25

HEADWALL OUTLET DETAIL

LEGEND:

- 450Ø RCP — DRAINAGE PIPE CLASS 3 UNLESS NOTED OTHERWISE
- OVERFLOW PIPE FROM RAIN WATER TANK
- IN BASIN SWALE
- SWALE
- 1800 DOUBLE SIDE ENTRY PIT
- FIELD GULLY PIT
- JUNCTION BOX
- RIP RAP SCOUR PROTECTION AT OUTLET
- HEADWALL

NOTES:

1. ALL CONCRETE PIPES AND STRUCTURES DOWNSTREAM OF BASIN TO BE MARINE GRADE.
2. MINIMUM FABRIC LAP 300mm.
3. MAXIMUM BATTER SLOPE ABOVE HEADWALL 1V : 2H.
4. ALL CONCRETE STORMWATER PIPES ARE TO BE RUBBER RING JOINTED.
5. ALL STORMWATER DRAINAGE STRUCTURES INCLUDING PITS AND HEADWALLS SHALL ADOPT A MINIMUM CONCRETE Fc' 40MPa.
6. DOWNPIPE CONNECTIONS (NOT SHOWN) ARE TO BE NOM 100-150 DIA (TBC) PVC @ 1.0% MINIMUM GRADE.
7. PIPEWORK CONNECTING RAINWATER TANKS IS SHOWN INDICATIVE ONLY. FINAL DETAILS AND CONFIGURATIONS TO BE DEVELOPED IN CONJUNCTION WITH BUILDING DETAILING.
8. ALL TRENCHES IN PLANT AREAS TO BE BACKFILLED USING TYPE HS2 SUPPORT CONDITION IN ACCORDANCE WITH AS3725.
9. ALL STORMWATER PIT COVERS TO BE TRAFFICABLE CLASS D UNLESS OTHERWISE NOTED.
10. WHERE RIP RAP IS SPECIFICED IT SHALL CONSIST WHOLLY OF HARD, DURABLE, DENSE AND NAUTURAL ROCK. ALL SOTNES SHALL BE WELL SHAPED WITH NO STONE HAVING A LENGTH MORE THAN 2.5 TIMES ITS BREADTH OR THICKNESS.

NOT FOR CONSTRUCTION
PRELIMINARY DRAWING FOR INFORMATION ONLY

SCALE 1:500 (5 0 10 20)

BASED ON PIPELINES HYDRAULICS.

REVISION PANEL					
REV	DATE	DRN	DETAILS	APR'D	CURRENT REV AUTHORISED
UR	17.05.24		UNDER REVIEW		SIGNATURE
CURRENT REVISION CONTRACTOR:					

DESIGN PANEL	
DESIGNED	AUTHORISED
DRAWN	SIGNATURE
REVIEWED	
CONTRACTOR:	

Government of South Australia — SA Water

This drawing is the property of the SOUTH AUSTRALIAN WATER CORPORATION and shall not be copied or modified in part or in whole without authorization.

ISSUED FOR DEVELOPMENT APPLICATION

EYRE PENINSULA DESALINATION PLANT
EX BHP - BILLY LIGHTS POINT
DESALINATION PLANT
STORMWATER DRAINAGE
ACCESS ROAD

PROJECT DRAWING NUMBER: EPDP-600-SMC-SWD-DRG-0002

A1 (SHT SIZE) | MAXIMO ID: P041915 | PROJECT No: A0012-0025 | UR2 (REVISION)

TOTAL SHEETS: | DISCIPLINE: CIVIL

SUPERSEDES:

DRAWING NUMBER — YEAR — NUMBER — SHEET

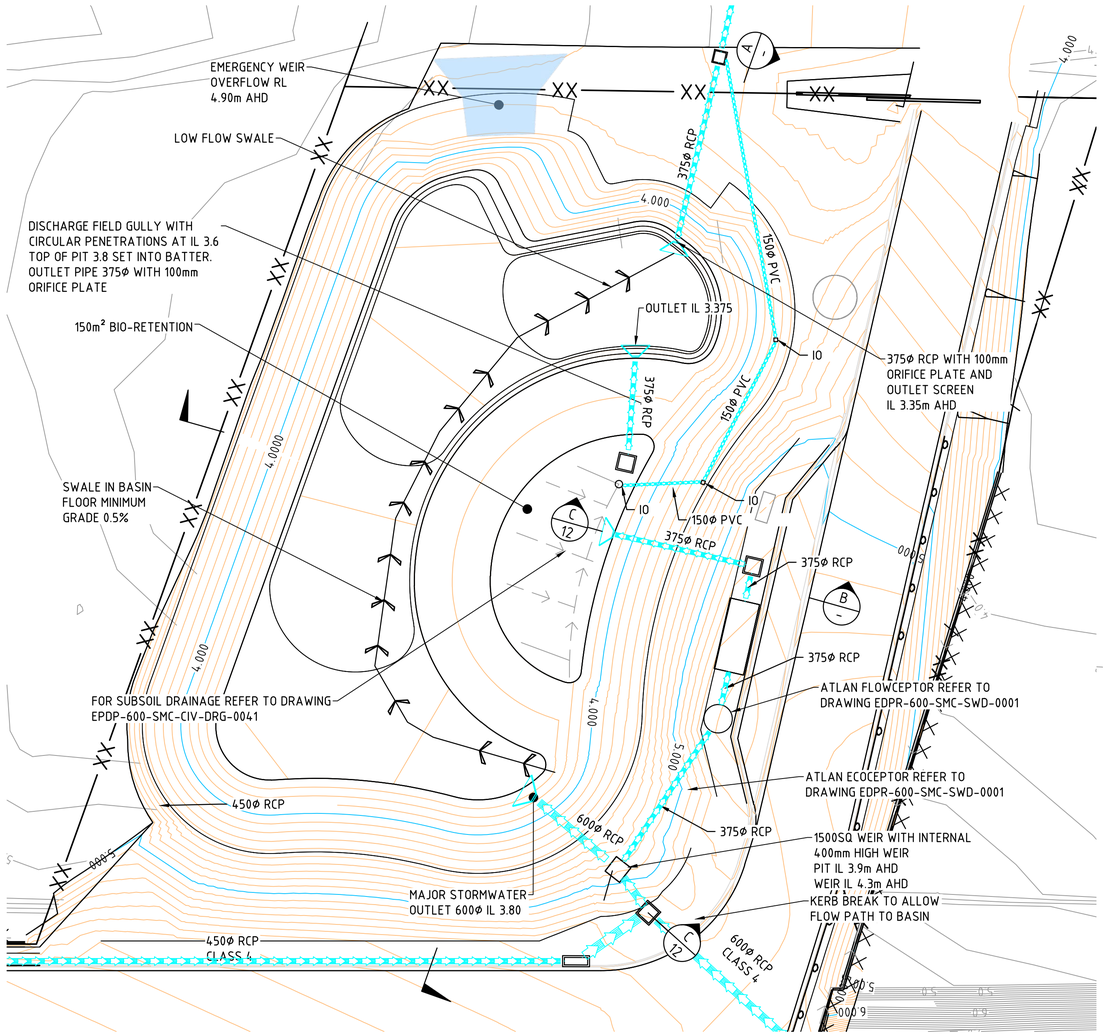

STORMWATER BASIN
SCALE 1:250

BIORETENTION MEDIA NOTES:

1. THE FILTRATION LAYER SHALL CONSIST OF SANDY LOAM WITH PERMEABILITY IN THE RANGE OF 180-300mm PER HOUR ONCE PLACED AND LIGHTLY COMPACTED.
2. THE FILTER MEDIA MUST CONFORM TO THE FOLLOWING REQUIREMENTS:
   - ORGANIC MATTER OF NO GREATER THAN 5% WEIGHT/ WEIGHT
   - PH 5.5 TO 7.5
   - ELECTRICAL CONDUCTIVITY (EC) < 1.2 DS/M
   - PHOSPHORUS BETWEEN 35 AND 47 MG/KG
3. THE SOIL MEDIA SHALL BE CAPABLE OF SUPPORTING VEGETATION.
4. LANDSCAPE DESIGN FOR BIORETENTION BASIN AND DETENTION AREA TO BE PROVIDED BY A LANDSCAPE ARCHITECT.

LEGEND:

- DRAINAGE PIPE
- OVERFLOW PIPE
- SWALE
- 1800 DOUBLE SIDE ENTRY PIT
- FIELD GULLY PIT
- JUNCTION BOX
- HEADWALL

BASIN KEY DETAILS

DEPTH FROM OUTLET TO TOP OF BUND = 1.62m AHD
TOTAL DETENTION VOLUME = 1900m³
OUTLET IL = 3.35m AHD
FREEBOARD = 150mm
NOMINAL BATTERS = 1:4
BIORETENTION PROVIDED = 150m²

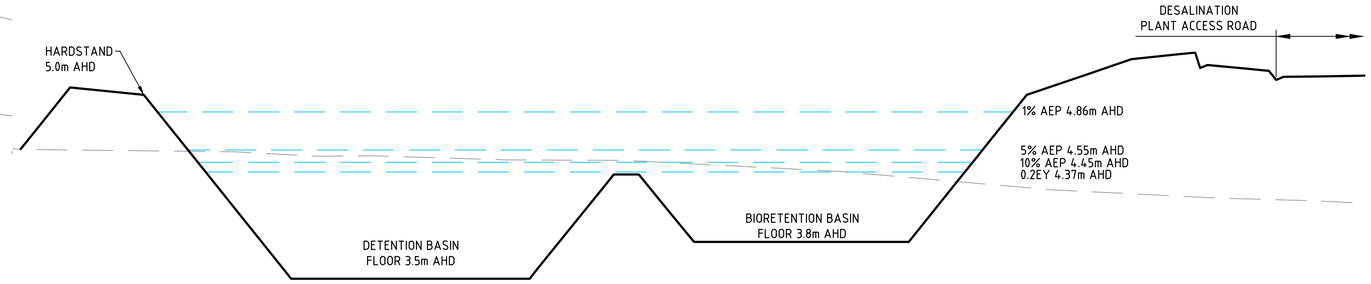

SECTION B
SCALE 1:25

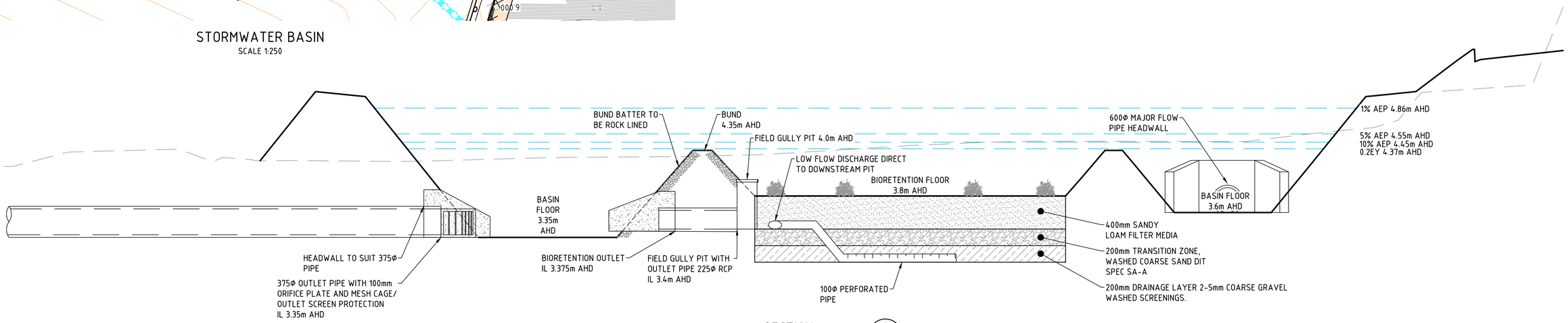

SECTION A
SCALE 1:25

ISSUED FOR DEVELOPMENT APPLICATION

NOT FOR CONSTRUCTION
PRELIMINARY DRAWING FOR INFORMATION ONLY

SCALE 1:250 — 2.5 0 5 10
SCALE 1:25 — 0.25 0 0.50 1.00

REVISION PANEL

REV	DATE	DRN	DETAILS	APR'D
UR2	10.05.2024	KWS	UNDER REVISION	
UR2	12.04.2024		UNDER REVISION	

CURRENT REVISION CONTRACTOR:
CURRENT REV AUTHORISED
SIGNATURE

DESIGN PANEL
DESIGNED
DRAWN
REVIEWED
AUTHORISED
SIGNATURE
CONTRACTOR:

Government of South Australia
SA Water

This drawing is the property of the SOUTH AUSTRALIAN WATER CORPORATION and shall not be copied or modified in part or in whole without authorization.

EYRE PENINSULA DESALINATION PLANT
EX BHP - BILLY LIGHTS POINT
DESALINATION PLANT
STORMWATER BASIN
PLANT

PROJECT DRAWING NUMBER
EPDP-600-SMC-SWD-DRG-0011

A1 SHT SIZE
MAXIMO ID: P041915
PROJECT No: A0012-0025
UR2 REVISION
TOTAL SHEETS:
DISCIPLINE: CIVIL
SUPERSEDES:
DRAWING NUMBER
YEAR NUMBER SHEET

NOTES:

1) ALL COLUMNS SHOWN INDICATIVELY, DETAILS TO BE PROVIDED IN LATER STAGES.

2) STAIRS AND ACCESS RAMPS HAVE NOT BEEN DETAILED AND ARE NOT ACCOUNTED FOR IN THE DESIGN OF THIS FOOTING.

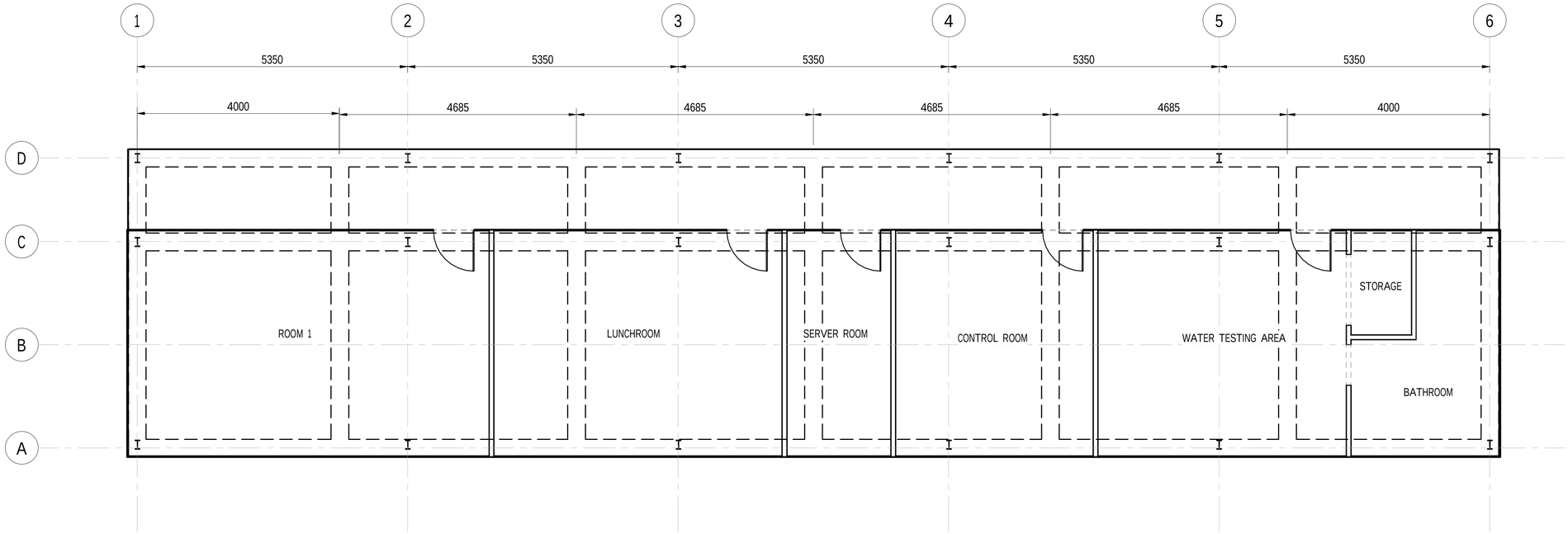

CONTROL ROOM GENERAL ARRANGEMENT

SCALE 1 : 50

SCALE 1:50 0.5 0 1 2

ISSUED FOR DEVELOPMENT APPLICATION

NOT FOR CONSTRUCTION
PRELIMINARY DRAWING FOR INFORMATION ONLY

REVISION PANEL

REV	DATE	DRN	DETAILS	APR'D
UR2	15.05.2024		UNDER REVISION	
UR1	12.04.2024		UNDER REVISION	
UR	21.12.2023		UNDER REVISION	

CURRENT REVISION CONTRACTOR: SMEC

CURRENT REV AUTHORISED

SIGNATURE

DESIGN PANEL

DESIGNED	AUTHORISED
DRAWN	SIGNATURE
REVIEWED	

CONTRACTOR: SMEC

Government of South Australia

SA Water

This drawing is the property of the © SOUTH AUSTRALIAN WATER CORPORATION and shall not be copied or modified in part or in whole without authorization.

EYRE PENINSULA DESALINATION PLANT
EX BHP - BILLY LIGHTS POINT
CONTROL ROOM
STRUCTURAL
GENERAL ARRANGMENT

PROJECT DRAWING NUMBER
EPDP-600-SMC-STR-DRG-1051

A1 SHT SIZE | MAXIMO ID: P041915 | PROJECT No: A0012-0025 | UR2 REVISION

TOTAL SHEETS: | DISCIPLINE: STRUCTURAL

SUPERSEDES:

DRAWING NUMBER

SMEC PROJECT NO. 3005873

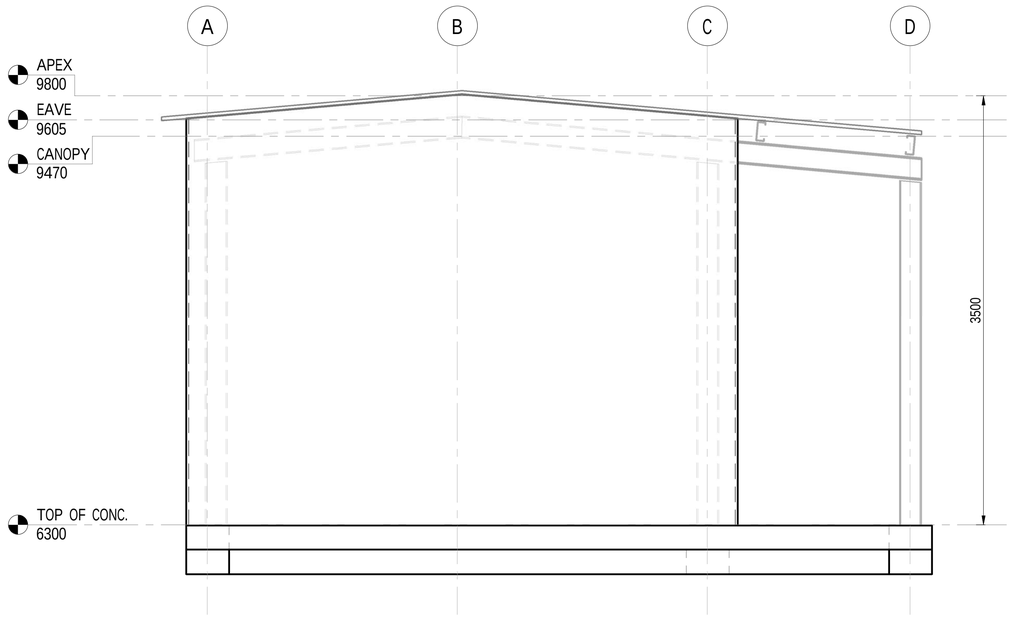

EAST ELEVATION
SCALE 1 : 25

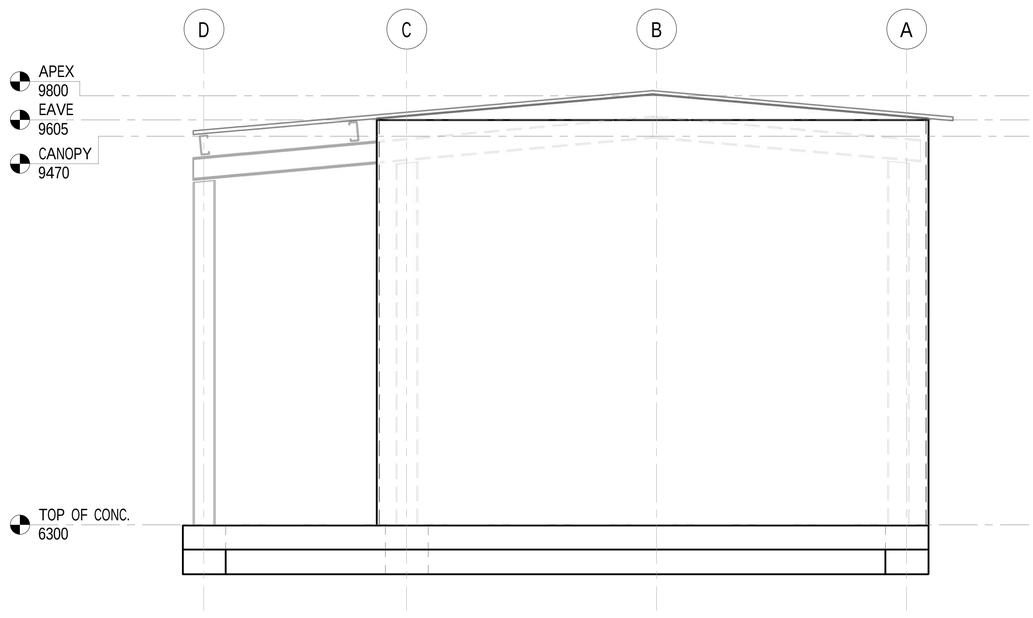

WEST ELEVATION
SCALE 1 : 25

COLORBOND ULTRA© SURFMIST
(CLADDING DETAILS TBC)
(TYP.)

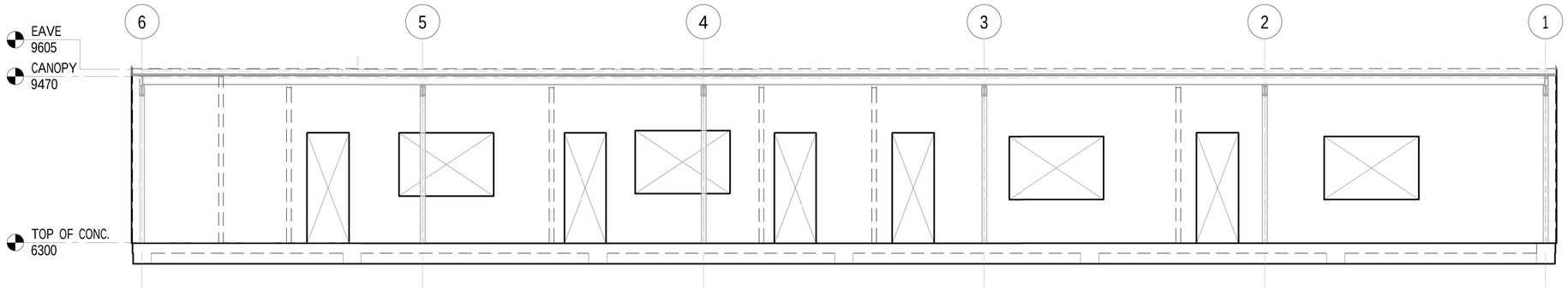

NORTH ELEVATION
SCALE 1 : 50

ISSUED FOR DEVELOPMENT APPLICATION

NOT FOR CONSTRUCTION
PRELIMINARY DRAWING FOR INFORMATION ONLY

PROJECT DRAWING NUMBER
EPDP-600-SMC-STR-DRG-1451

SCALE 1:25 0.25 0 0.50 1.00
SCALE 1:50 0.5 0 1 2

REVISION PANEL

REV	DATE	DRN	DETAILS	APR'D
UR2	15.05.2024		UNDER REVISION	
UR1	12.04.2024		UNDER REVISION	
UR	21.12.2023		UNDER REVISION	

CURRENT REVISION CONTRACTOR: SMEC

CURRENT REV AUTHORISED

SIGNATURE

DESIGN PANEL

DESIGNED	AUTHORISED
DRAWN	SIGNATURE
REVIEWED	

CONTRACTOR: SMEC

Government of South Australia
SA Water

This drawing is the property of the © SOUTH AUSTRALIAN WATER CORPORATION and shall not be copied or modified in part or in whole without authorization.

EYRE PENINSULA DESALINATION PLANT
EX BHP - BILLY LIGHTS POINT
CONTROL ROOM
STRUCTURAL
ELEVATIONS

A1 SHT SIZE
MAXIMO ID: P041915
PROJECT No: A0012-0025
UR2 REVISION
TOTAL SHEETS:
DISCIPLINE: STRUCTURAL
SUPERSEDES:
DRAWING NUMBER

SMEC PROJECT NO. 3005873

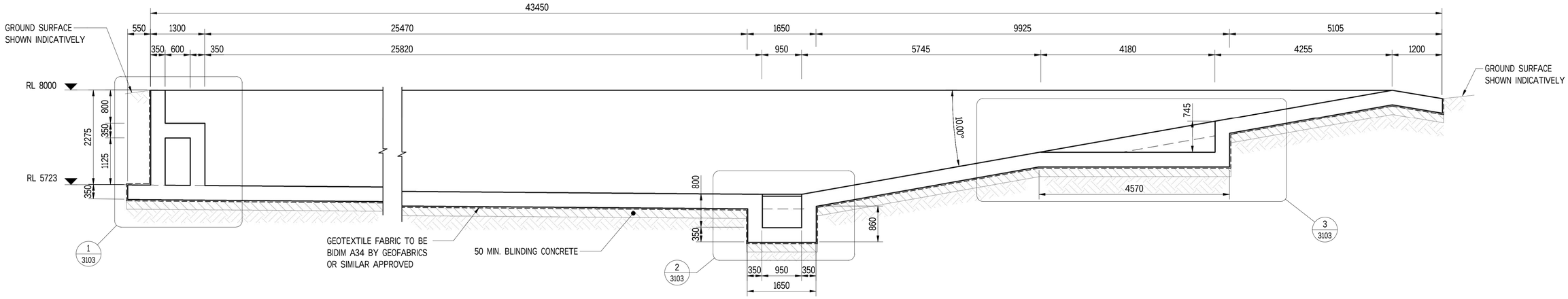

SECTION GA 3101
SCALE 1 : 50

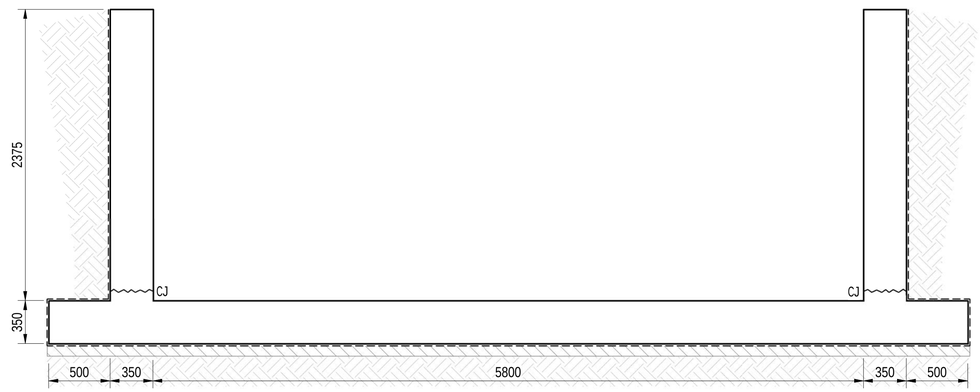

SECTION GB 3101
SCALE 1 : 25

SCALE 1:25 0.25 0 0.50 1.00
SCALE 1:50 0.5 0 1 2

ISSUED FOR DEVELOPMENT APPLICATION

NOT FOR CONSTRUCTION
PRELIMINARY DRAWING FOR INFORMATION ONLY

REVISION PANEL

REV	DATE	DRN	DETAILS	APR'D
UR1	15.05.2024		UNDER REVISION	
UR	12.04.2024		UNDER REVISION	

CURRENT REVISION CONTRACTOR: SMEC

CURRENT REV AUTHORISED

SIGNATURE

DESIGN PANEL

DESIGNED	AUTHORISED
DRAWN	SIGNATURE
REVIEWED	

CONTRACTOR: SMEC

Government of South Australia
SA Water

This drawing is the property of the © SOUTH AUSTRALIAN WATER CORPORATION and shall not be copied or modified in part or in whole without authorization.

EYRE PENINSULA DESALINATION PLANT
EX BHP - BILLY LIGHTS POINT
CONCRETE STRUCTURES
STRUCTURAL
GROSS SOLIDS TRAP SECTIONS

PROJECT DRAWING NUMBER
EPDP-600-SMC-STR-DRG-3102

A1 SHT SIZE
MAXIMO ID: P041915
PROJECT No: A0012-0025
UR1 REVISION
TOTAL SHEETS:
DISCIPLINE: STRUCTURAL
SUPERSEDES:
DRAWING NUMBER

SMEC PROJECT NO. 3005873

BRINE AREA WALL SCHEDULE

MARK	THICKNESS	REINFORCEMENT	COMMENTS
BPW1	600		
BPW2	400		
BPW3	250		

BRINE AREA SLAB REINFORCEMENT SCHEDULE

MARK	THICKNESS	TOP REINF.	COMMENTS
BPCS3	200	N16-200 EACH WAY	

BRINE AREA FOOTING BEAM REINFORCEMENT SCHEDULE

MARK	WIDTH	DEPTH	REINFORCEMENT	COMMENTS
BPFB1	1000	600	3N16	

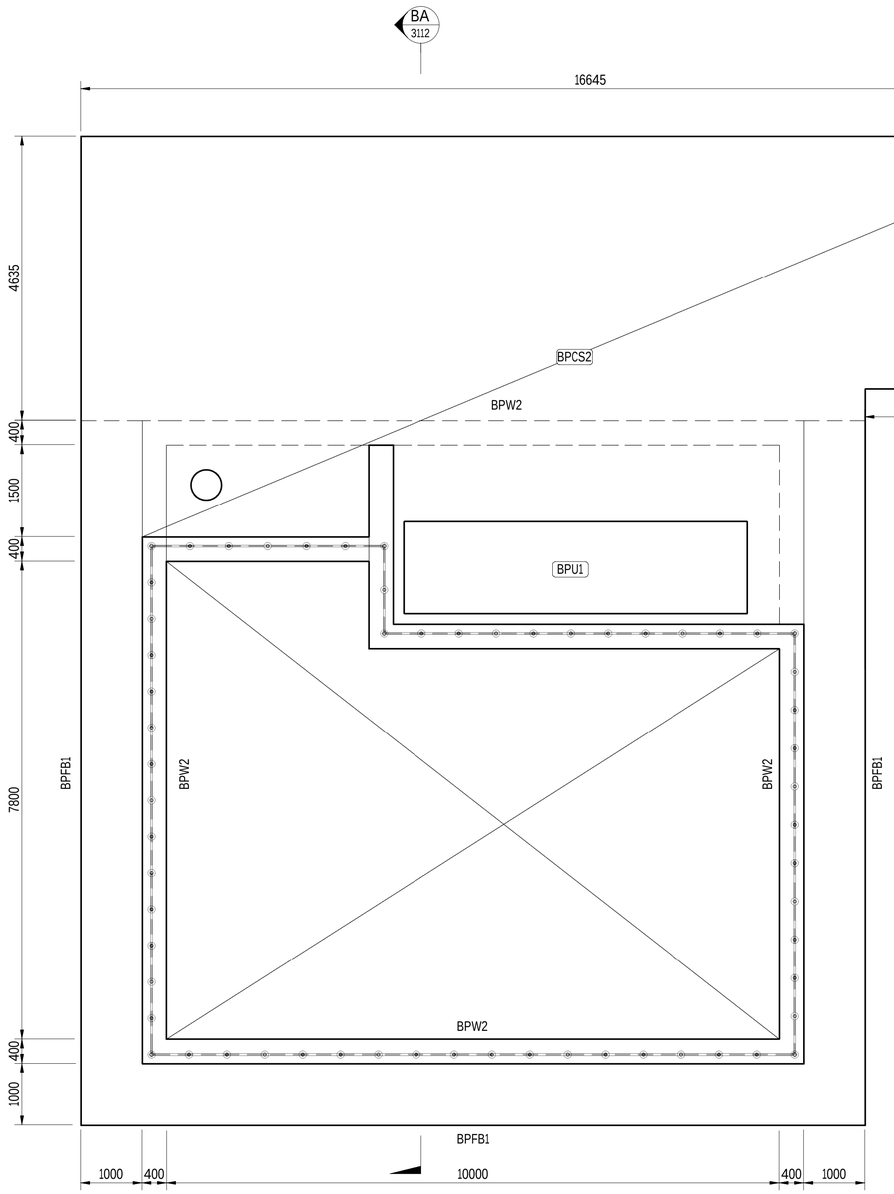

BRINE PIT TOP CONCRETE PLAN
SCALE 1 : 50

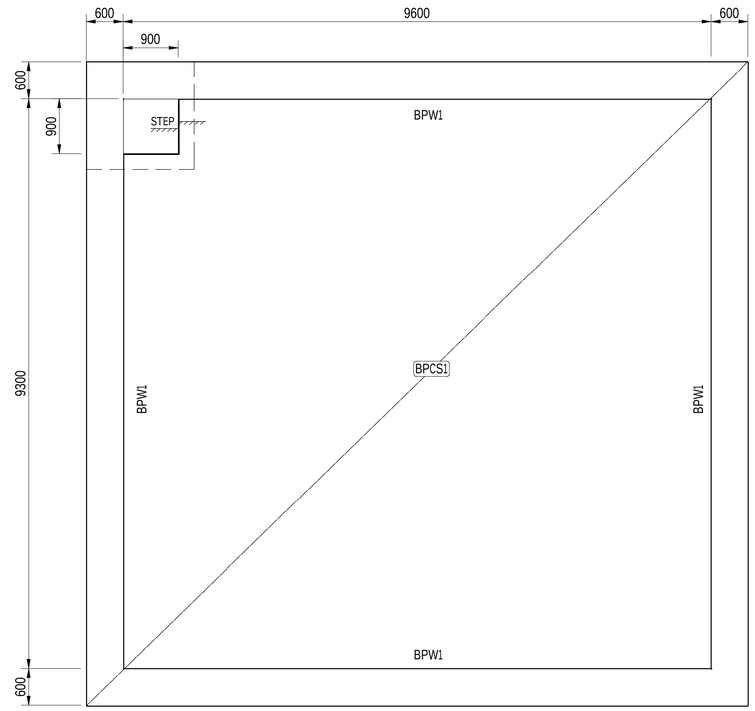

BRINE PIT BASE CONCRETE PLAN
SCALE 1 : 50

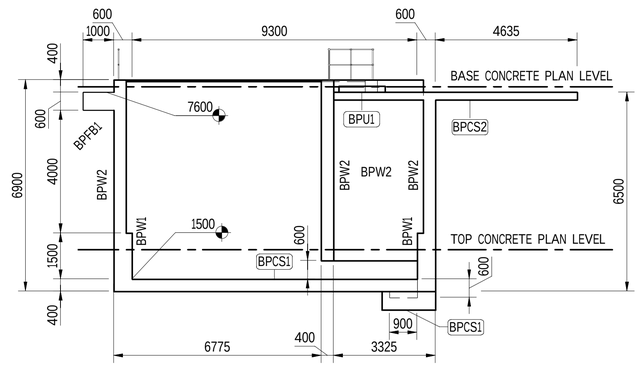

SECTION BA 3111
SCALE 1 : 100

SCALE 1:100 1 0 1 2 3 4 5
SCALE 1:50 0.5 0 1 2

ISSUED FOR DEVELOPMENT APPLICATION

NOT FOR CONSTRUCTION
PRELIMINARY DRAWING FOR INFORMATION ONLY

REVISION PANEL

REV	DATE	DRN	DETAILS	APR'D
UR2	29.05.2024		UNDER REVISION	
UR1	15.05.2024		UNDER REVISION	
UR	12.04.2024		UNDER REVISION	

CURRENT REVISION CONTRACTOR: SMEC

CURRENT REV AUTHORISED
SIGNATURE

DESIGN PANEL

DESIGNED	AUTHORISED
DRAWN	SIGNATURE
REVIEWED	

CONTRACTOR: SMEC

Government of South Australia
SA Water

This drawing is the property of the SOUTH AUSTRALIAN WATER CORPORATION and shall not be copied or modified in part or in whole without authorization.

EYRE PENINSULA DESALINATION PLANT
EX BHP - BILLY LIGHTS POINT
CONCRETE STRUCTURES
STRUCTURAL
BRINE PIT LAYOUTS & SECTIONS SHEET 1

PROJECT DRAWING NUMBER
EPDP-600-SMC-STR-DRG-3112

A1 SHT SIZE
MAXIMO ID: P041915
PROJECT No: A0012-0025
UR2 REVISION
TOTAL SHEETS:
DISCIPLINE: STRUCTURAL
SUPERSEDES:
DRAWING NUMBER
P041915-

SMEC PROJECT NO. 3005873

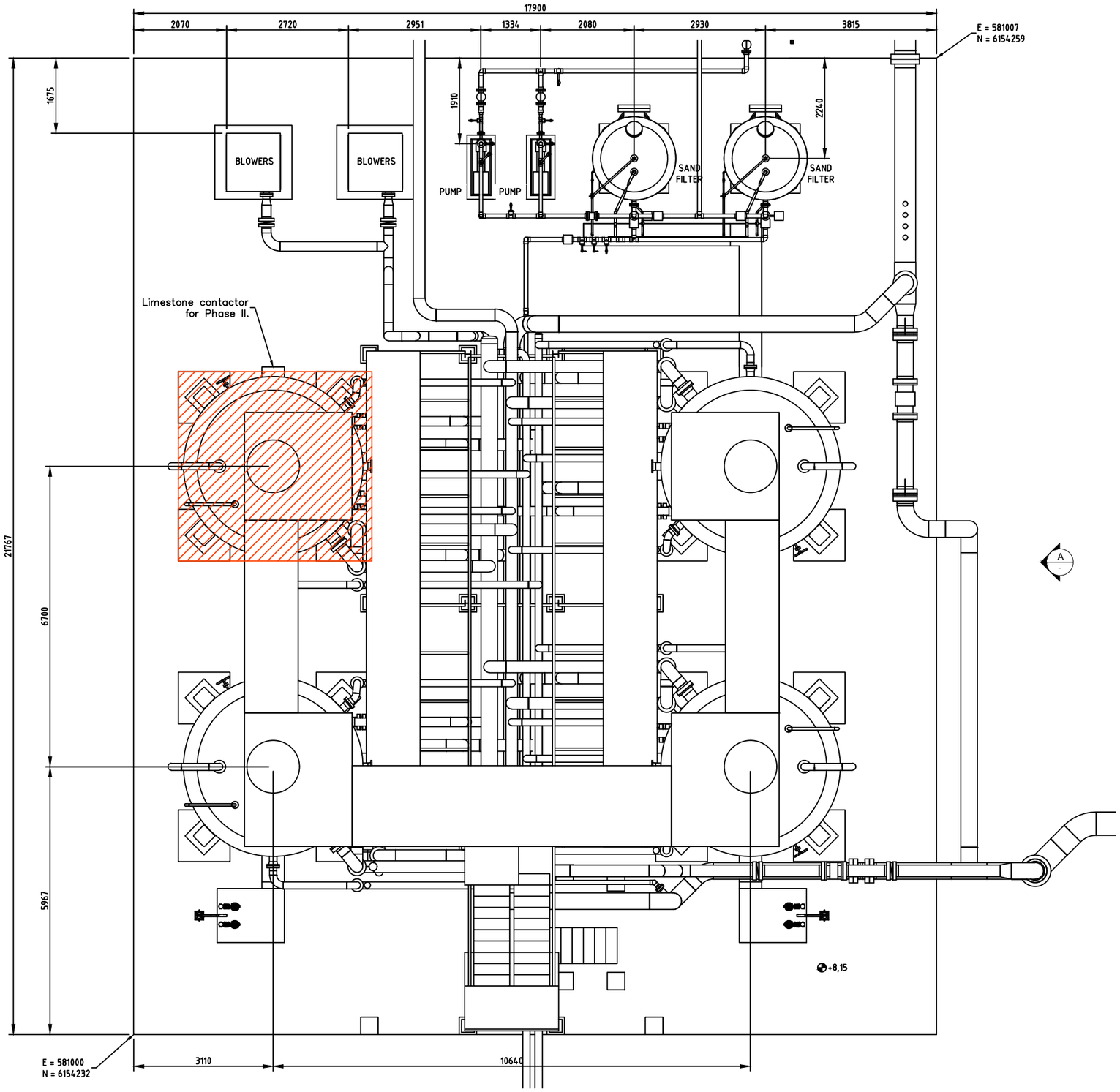

PLAN
Scale 1:50

ISSUED FOR DEVELOPMENT APPLICATION

NOT FOR CONSTRUCTION
PRELIMINARY DRAWING FOR INFORMATION ONLY

PROJECT DRAWING NUMBER
EDPD-602-AGA-MEC-DRG-0001

REVISION PANEL				
REV	DATE	DRN	DETAILS	APR'D
UR	11/04/24	DAF	AS INDICATED	MB
UR	09/01/24	ORP	AS INDICATED	JGC
UR	18/12/23	ORP	UNDER REVISION	JGC
CURRENT REVISION CONTRACTOR:				

CURRENT REV AUTHORISED

SIGNATURE

DESIGN PANEL	
DESIGNED	AUTHORISED
DRAWN	SIGNATURE
REVIEWED	
CONTRACTOR:	

Government of South Australia
SA Water

This drawing is the property of the SOUTH AUSTRALIAN WATER CORPORATION and shall not be copied or modified in part or in whole without authorization.

EYRE PENINSULA DESALINATION PLANT
PORT LINCOLN DESALINATION WATER TREATMENT PLANT (LOT 10 ST ANDREWS DR)
PROCESS PLANT
LIMESTONE CONTACTORS ELEVATIONS
AND GENERAL ARRANGEMENT PLAN VIEW

A1 SHT SIZE
MAXIMO ID: P041915
PROJECT No: A0012-0025
UR REVISION
TOTAL SHEETS: -
DISCIPLINE:
SUPERSEDES:
DRAWING NUMBER
YEAR NUMBER SHEET

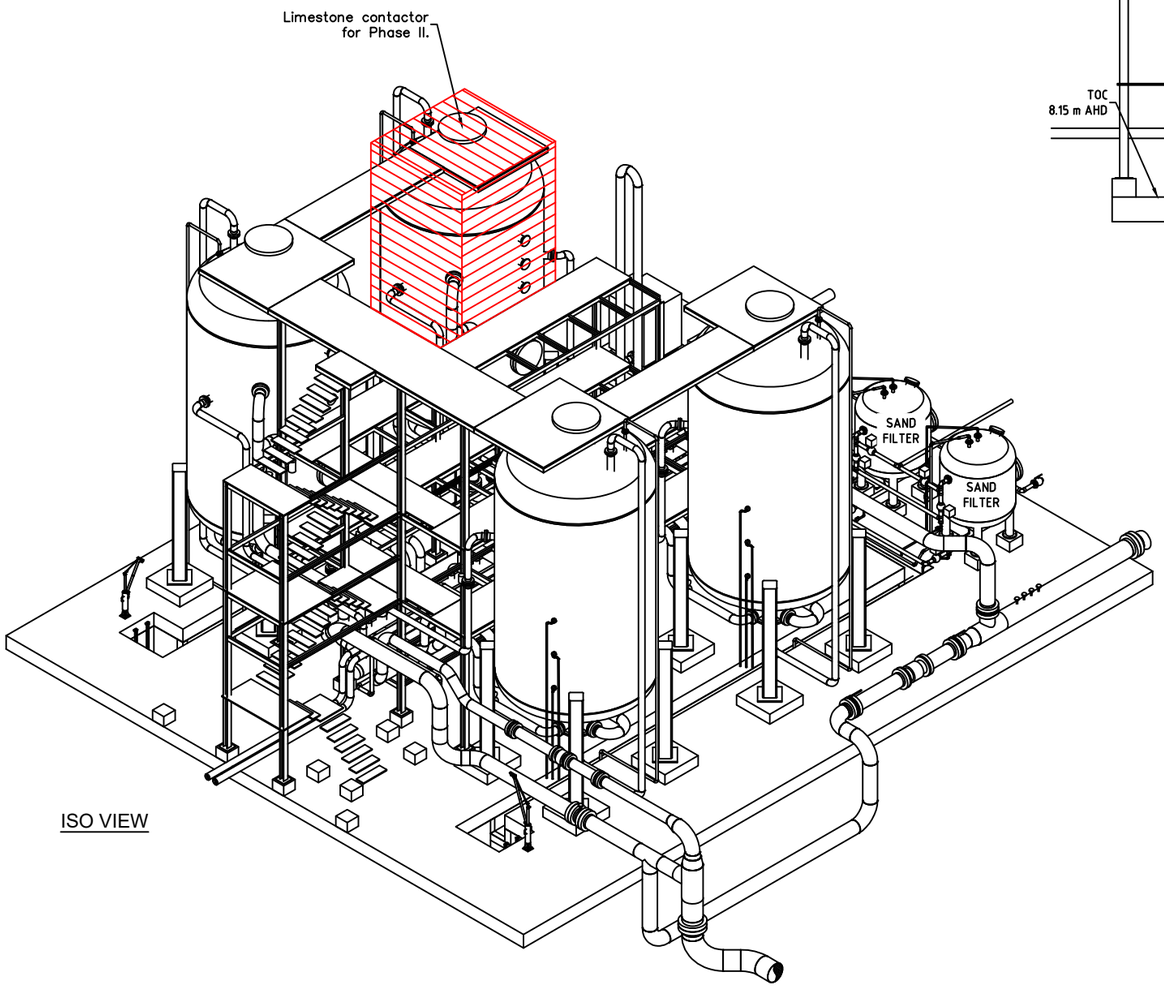

ISO VIEW

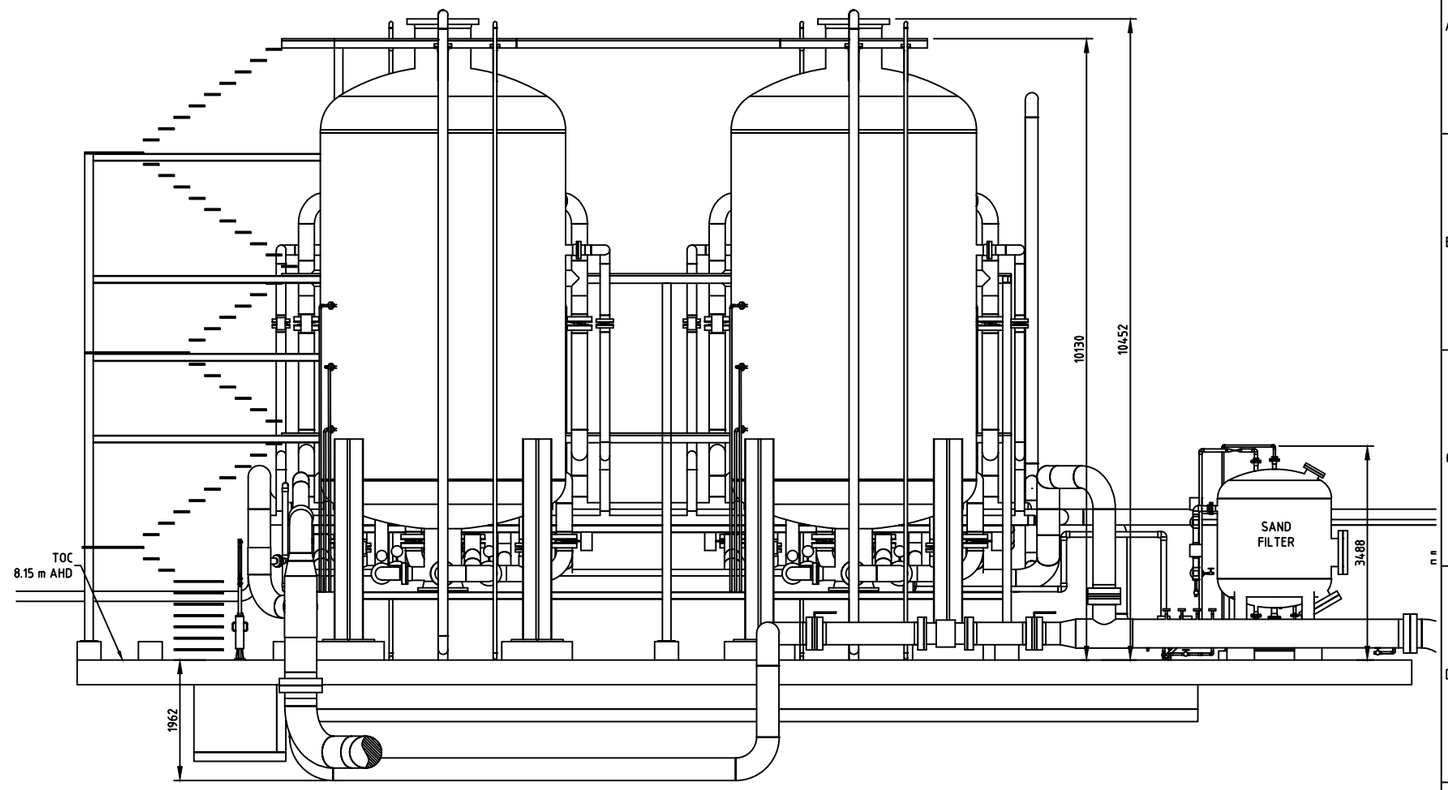

ELEVATION A

Scale 1:50

REVISION PANEL					
REV	DATE	DRN	DETAILS	APR'D	CURRENT REV AUTHORISED
UR	11/04/24	DAF	AS INDICATED	MB	SIGNATURE
UR	09/01/24	ORP	AS INDICATED	JGC	
UR	18/12/23	ORP	UNDER REVISION	JGC	
CURRENT REVISION CONTRACTOR:					

DESIGN PANEL	
DESIGNED	AUTHORISED
DRAWN	SIGNATURE
REVIEWED	
CONTRACTOR:	

ISSUED FOR DEVELOPMENT APPLICATION

NOT FOR CONSTRUCTION
PRELIMINARY DRAWING FOR INFORMATION ONLY

Government of South Australia

SA Water

This drawing is the property of the SOUTH AUSTRALIAN WATER CORPORATION and shall not be copied or modified in part or in whole without authorization.

EYRE PENINSULA DESALINATION PLANT

PORT LINCOLN DESALINATION WATER TREATMENT PLANT (LOT 10 ST ANDREWS DR)

PROCESS PLANT

MECHANICAL. LIMESTONE CONTACTORS.

ELEVATION AND ISO VIEW

PROJECT DRAWING NUMBER: EDPD-602-AGA-MEC-DRG-0002

A1 (SHT SIZE) | MAXIMO ID: P041915 | PROJECT No: A0012-0025 | UR (REVISION)

TOTAL SHEETS: - | DISCIPLINE:

SUPERSEDES:

DRAWING NUMBER

YEAR | NUMBER | SHEET

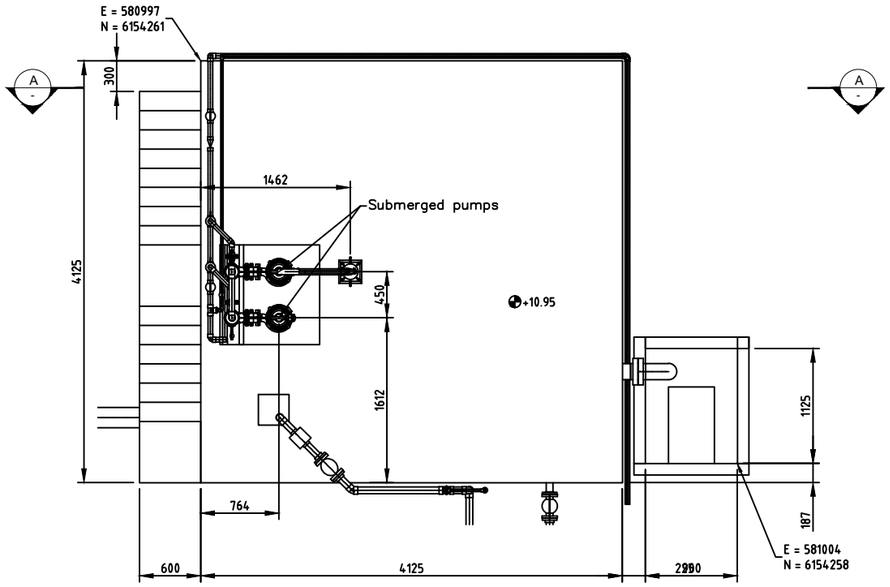

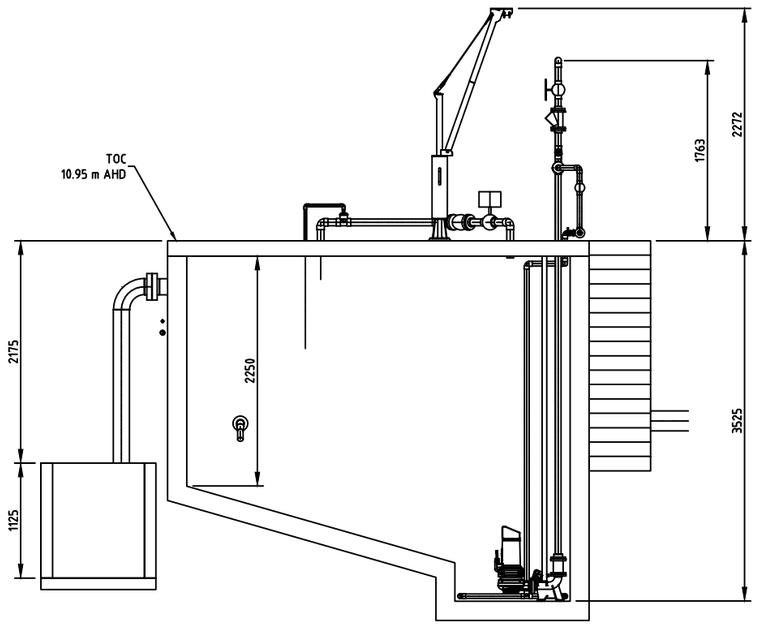

SECTION VIEW A-A

Scale 1:40

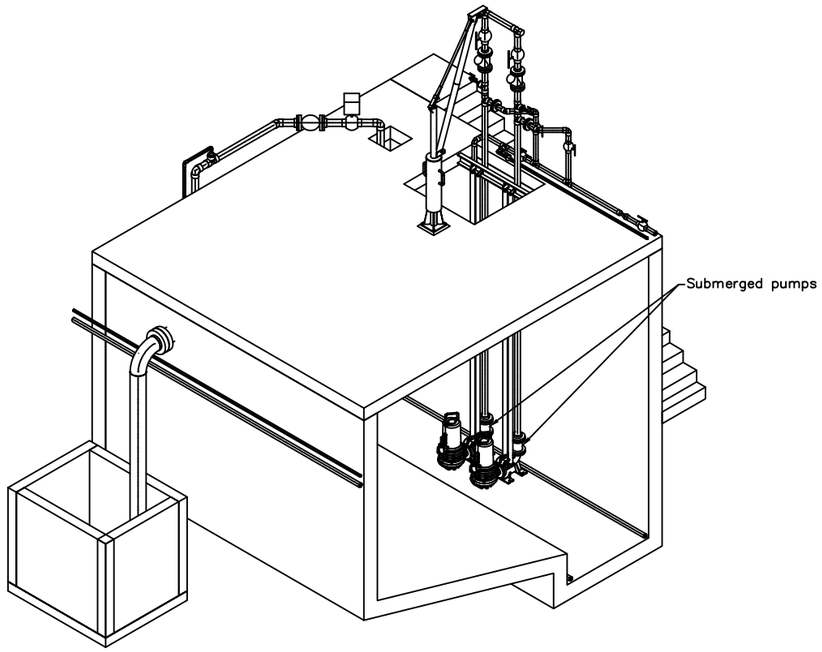

ISO VIEW

ISSUED FOR DEVELOPMENT APPLICATION

NOT FOR CONSTRUCTION
PRELIMINARY DRAWING FOR INFORMATION ONLY

PROJECT DRAWING NUMBER
EDPD-602-AGA-MEC-DRG-0003

REVISION PANEL

REV	DATE	DRN	DETAILS	APR'D
UR	11/04/24	DAF	AS INDICATED	MB
UR	09/01/24	ORP	AS INDICATED	JGC
UR	18/12/23	ORP	UNDER REVISION	JGC

CURRENT REVISION CONTRACTOR:

CURRENT REV AUTHORISED

SIGNATURE

DESIGN PANEL

DESIGNED	AUTHORISED
DRAWN	SIGNATURE
REVIEWED	
CONTRACTOR:	

Government of South Australia

SA Water

This drawing is the property of the SOUTH AUSTRALIAN WATER CORPORATION and shall not be copied or modified in part or in whole without authorization.

EYRE PENINSULA DESALINATION PLANT

PORT LINCOLN DESALINATION WATER TREATMENT PLANT (LOT 10 ST ANDREWS DR)

PROCESS PLANT

RECUPERATION TANK

PLAN, SECTION AND ISO VIEW

A1 SHT SIZE

MAXIMO ID: P041915

PROJECT No: A0012-0025

UR REVISION

TOTAL SHEETS: -

DISCIPLINE:

SUPERSEDES:

DRAWING NUMBER

YEAR NUMBER SHEET

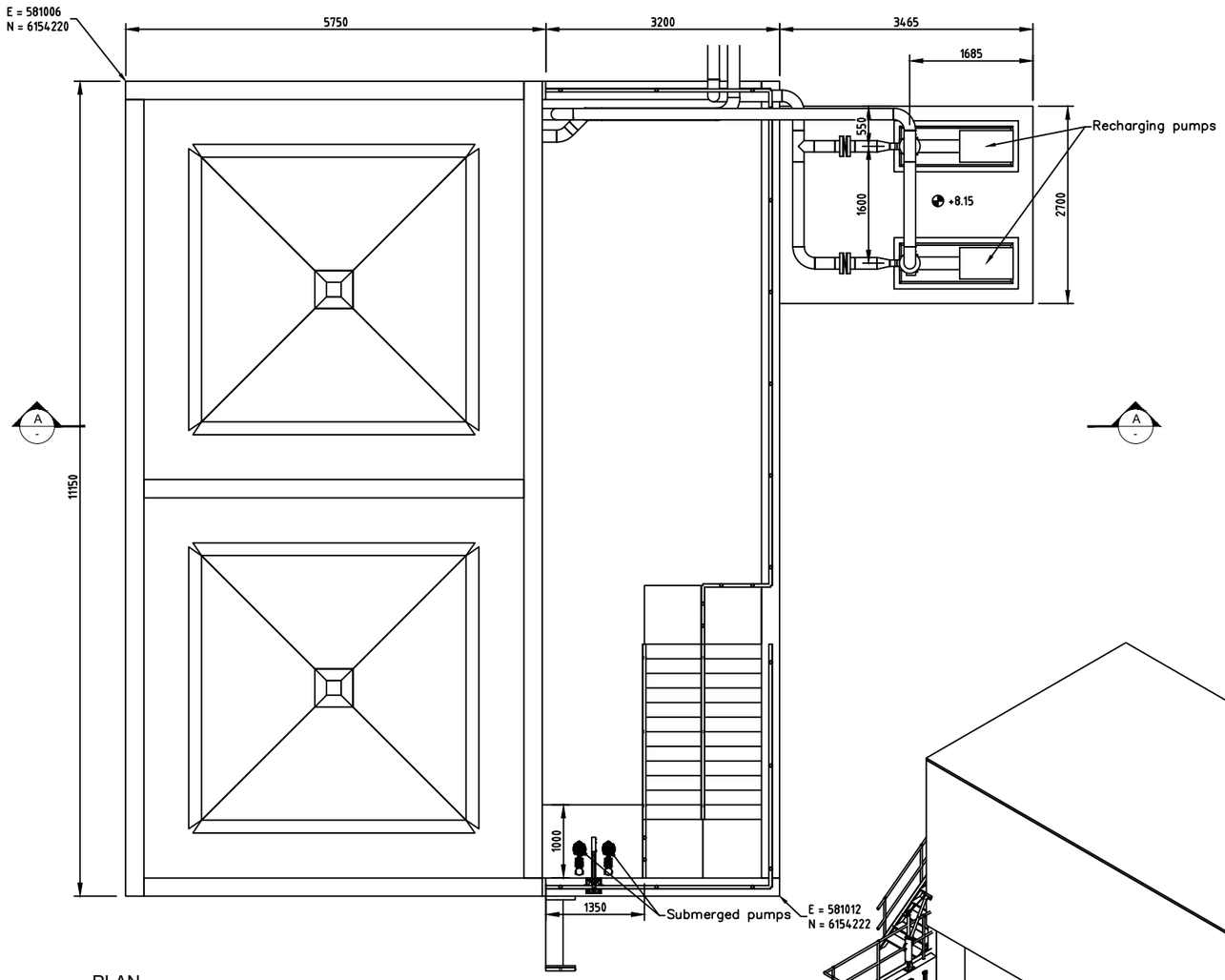

PLAN
Scale 1:40

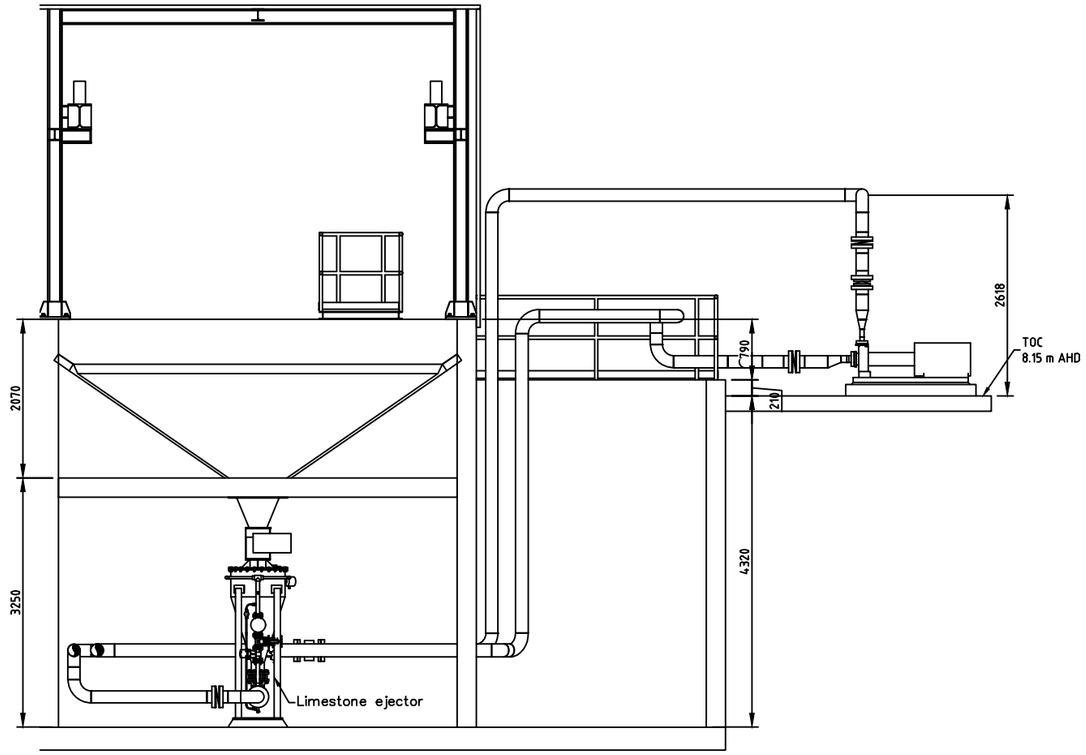

SECTION VIEW A-A
Scale 1:40

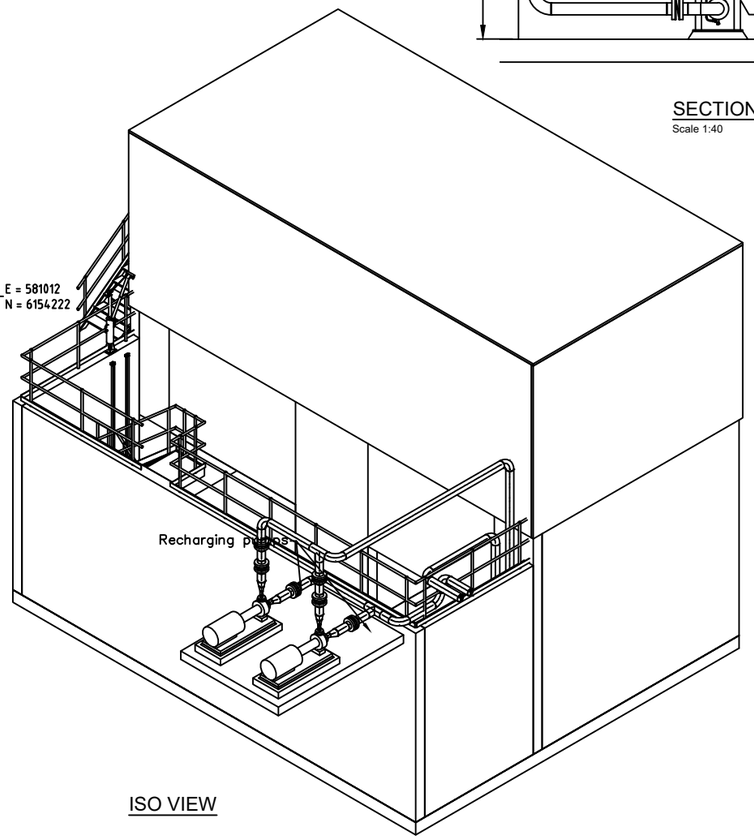

ISO VIEW

REVISION PANEL				
REV	DATE	DRN	DETAILS	APR'D
UR	11/04/24	DAF	AS INDICATED	MB
UR	09/01/24	ORP	AS INDICATED	JGC
UR	30/11/23	ORP	UNDER REVISION	JGC
CURRENT REVISION CONTRACTOR:				

CURRENT REV AUTHORISED

SIGNATURE

DESIGN PANEL	
DESIGNED	AUTHORISED
DRAWN	SIGNATURE
REVIEWED	
CONTRACTOR:	

Government of South Australia

SA Water

This drawing is the property of the SOUTH AUSTRALIAN WATER CORPORATION and shall not be copied or modified in part or in whole without authorization.

ISSUED FOR DEVELOPMENT APPLICATION

NOT FOR CONSTRUCTION
PRELIMINARY DRAWING FOR INFORMATION ONLY

PROJECT DRAWING NUMBER
EDPD-602-AGA-MEC-DRG-0004

EYRE PENINSULA DESALINATION PLANT
PORT LINCOLN DESALINATION WATER TREATMENT PLANT (LOT 10 ST ANDREWS DR)
PROCESS PLANT
CALCITE STORAGE TANK
PLAN, SECTION AND ISO VIEW

A1 SHT SIZE
MAXIMO ID: P041915
PROJECT No: A0012-0025
UR REVISION
TOTAL SHEETS: -
DISCIPLINE:
SUPERSEDES:
DRAWING NUMBER
YEAR NUMBER SHEET

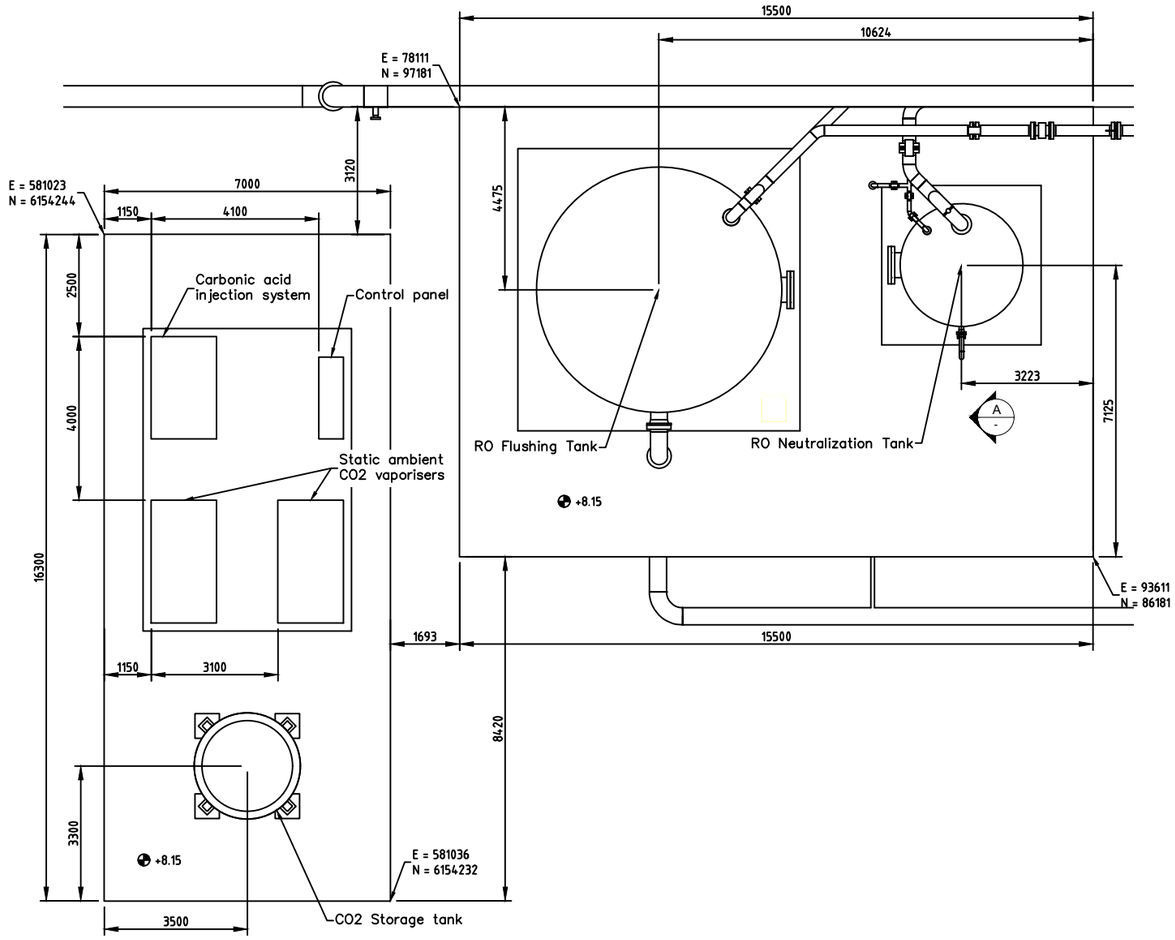

PLAN
Scale 1:75

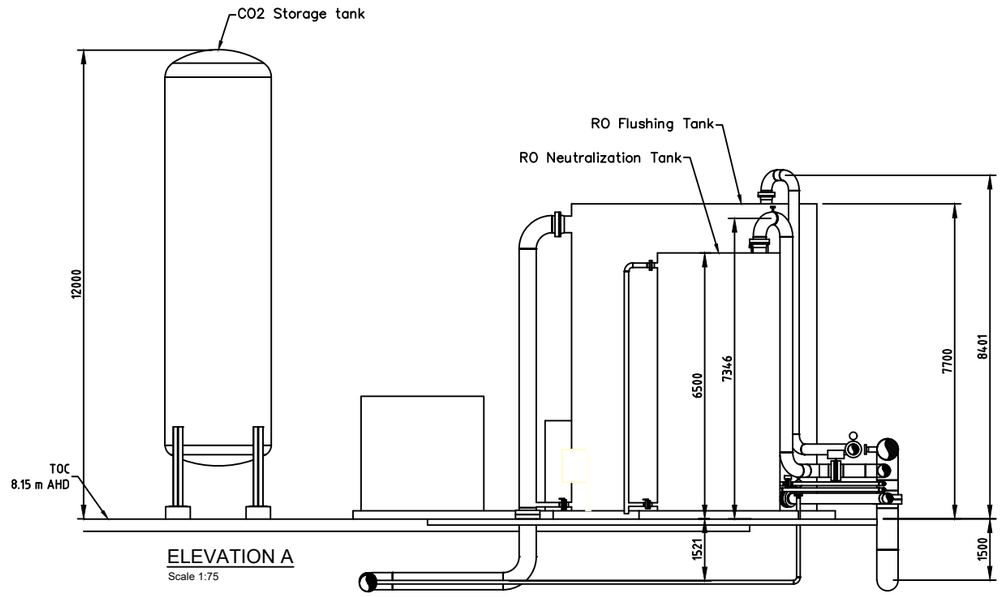

ELEVATION A
Scale 1:75

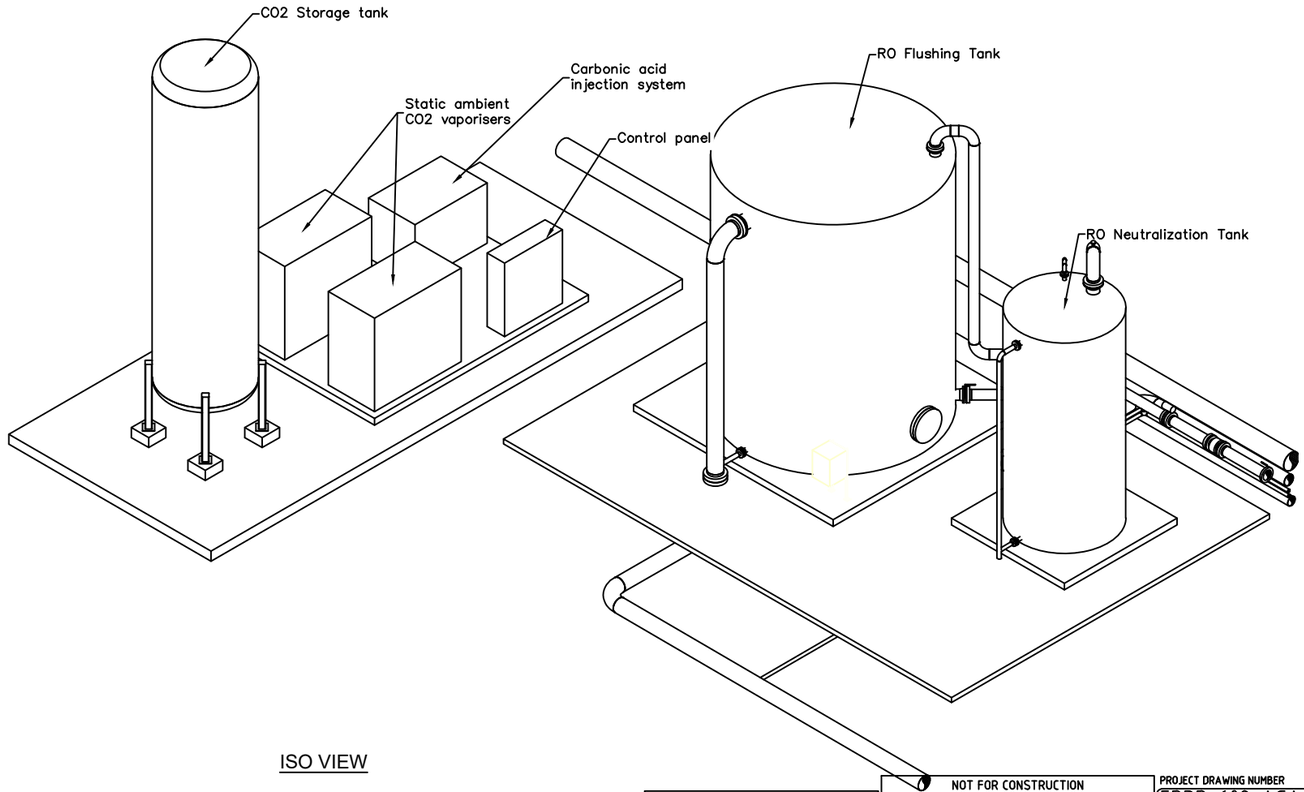

ISO VIEW

ISSUED FOR DEVELOPMENT APPLICATION

NOT FOR CONSTRUCTION
PRELIMINARY DRAWING FOR INFORMATION ONLY

PROJECT DRAWING NUMBER
EDPD-602-AGA-MEC-DRG-0005

REVISION PANEL

REV	DATE	DRN	DETAILS	APR'D
UR	11/04/24	DAF	AS INDICATED	MB
UR	09/01/24	ORP	AS INDICATED	JGC
UR	18/12/23	ORP	UNDER REVISION	JGC

CURRENT REVISION CONTRACTOR:

CURRENT REV AUTHORISED

SIGNATURE

DESIGN PANEL

DESIGNED	AUTHORISED
DRAWN	SIGNATURE
REVIEWED	
CONTRACTOR:	

Government of South Australia
SA Water

This drawing is the property of the SOUTH AUSTRALIAN WATER CORPORATION and shall not be copied or modified in part or in whole without authorization.

EYRE PENINSULA DESALINATION PLANT
PORT LINCOLN DESALINATION WATER TREATMENT PLANT (LOT 10 ST ANDREWS DR)
PROCESS PLANT
CO2, RO FLUSHING AND NEUTRALIZATION
PLAN, SECTION AND ISO VIEW

A1 SHT SIZE
MAXIMO ID: P041915
PROJECT No: A0012-0025
UR REVISION
TOTAL SHEETS: -
DISCIPLINE:
SUPERSEDES:
DRAWING NUMBER
YEAR NUMBER SHEET

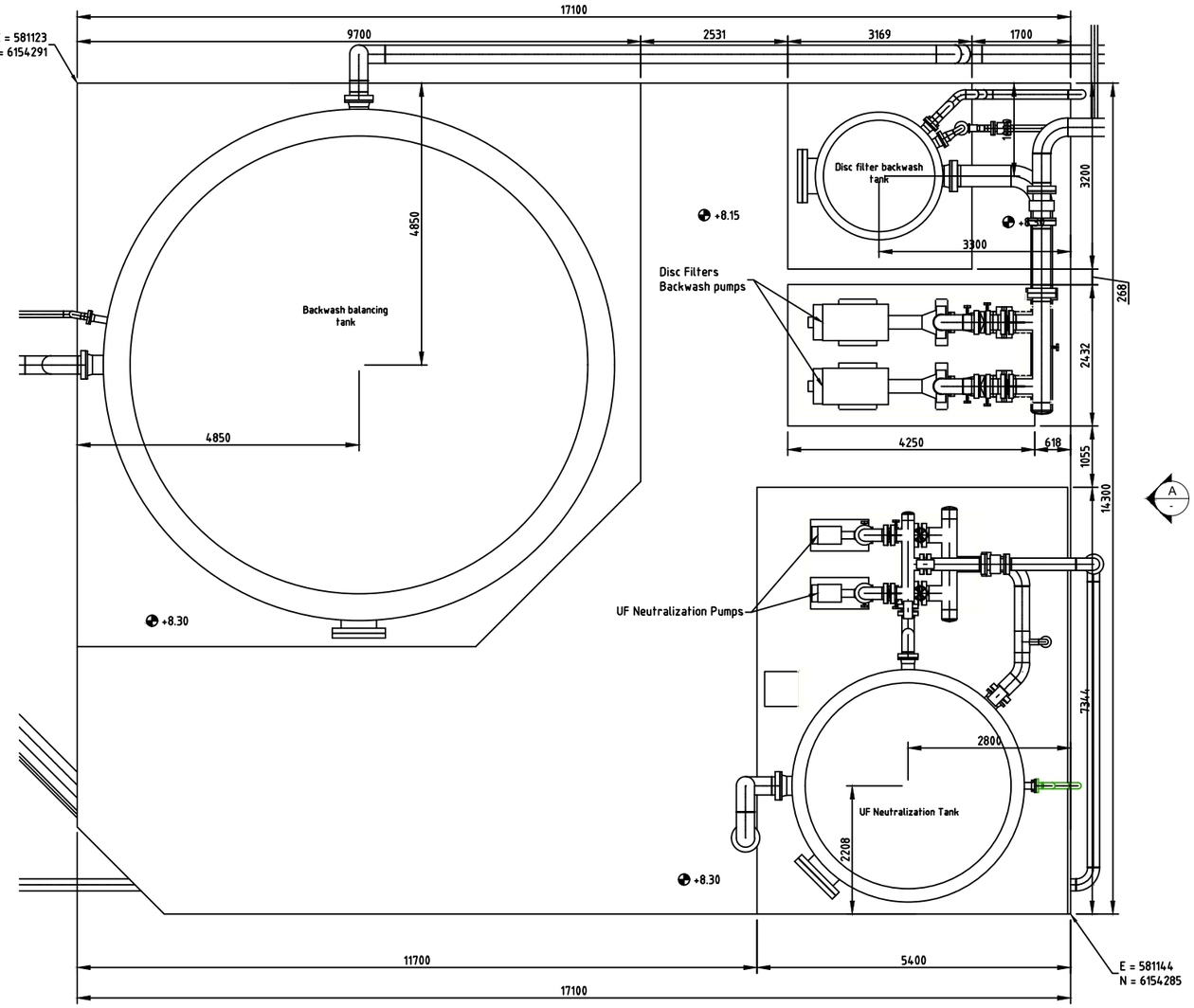

PLAN

Scale 1:50

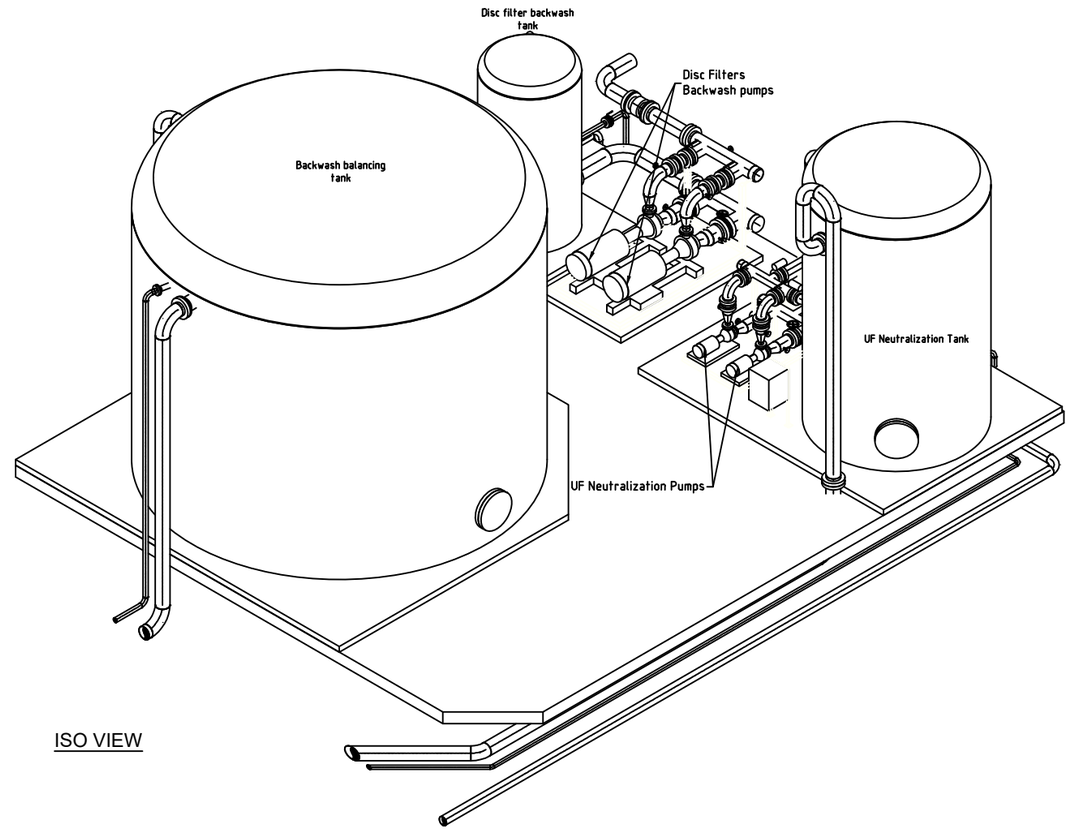

ISO VIEW

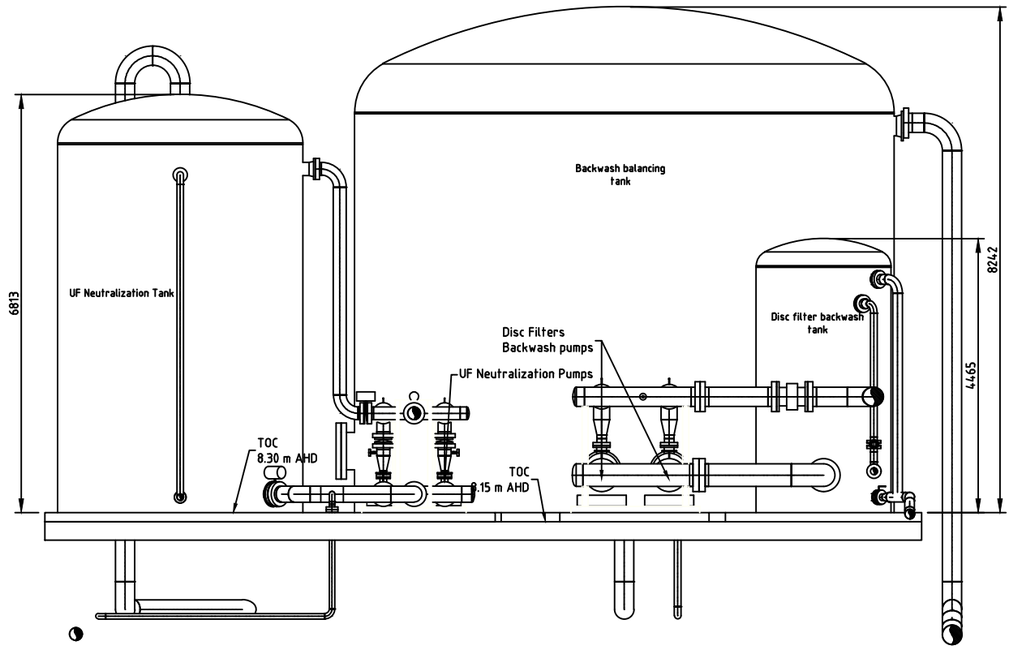

ELEVATION A

Scale 1:75

REVISION PANEL				
REV	DATE	DRN	DETAILS	APR'D
UR	11/04/24	DAF	AS INDICATED	MB
UR	29/01/24	ORP	NEW DISTRIBUTION	JGC
UR	09/01/24	ORP	AS INDICATED	JGC
UR	18/12/23	ORP	UNDER REVISION	JGC
CURRENT REVISION CONTRACTOR:				

CURRENT REV AUTHORISED

SIGNATURE

DESIGN PANEL	
DESIGNED	AUTHORISED
DRAWN	SIGNATURE
REVIEWED	
CONTRACTOR:	

Government of South Australia

SA Water

This drawing is the property of the SOUTH AUSTRALIAN WATER CORPORATION and shall not be copied or modified in part or in whole without authorization.

ISSUED FOR DEVELOPMENT APPLICATION

NOT FOR CONSTRUCTION
PRELIMINARY DRAWING FOR INFORMATION ONLY

PROJECT DRAWING NUMBER
EDPD-603-AGA-MEC-DRG-0002

EYRE PENINSULA DESALINATION PLANT

PORT LINCOLN DESALINATION WATER TREATMENT PLANT (LOT 10 ST ANDREWS DR)

PROCESS PLANT

UF BACKWASH

PLAN, SECTION AND ISO VIEW

A1 SHT SIZE

MAXIMO ID: P041915

PROJECT No: A0012-0025

UR REVISION

TOTAL SHEETS: -

DISCIPLINE:

SUPERSEDES:

DRAWING NUMBER

YEAR NUMBER SHEET

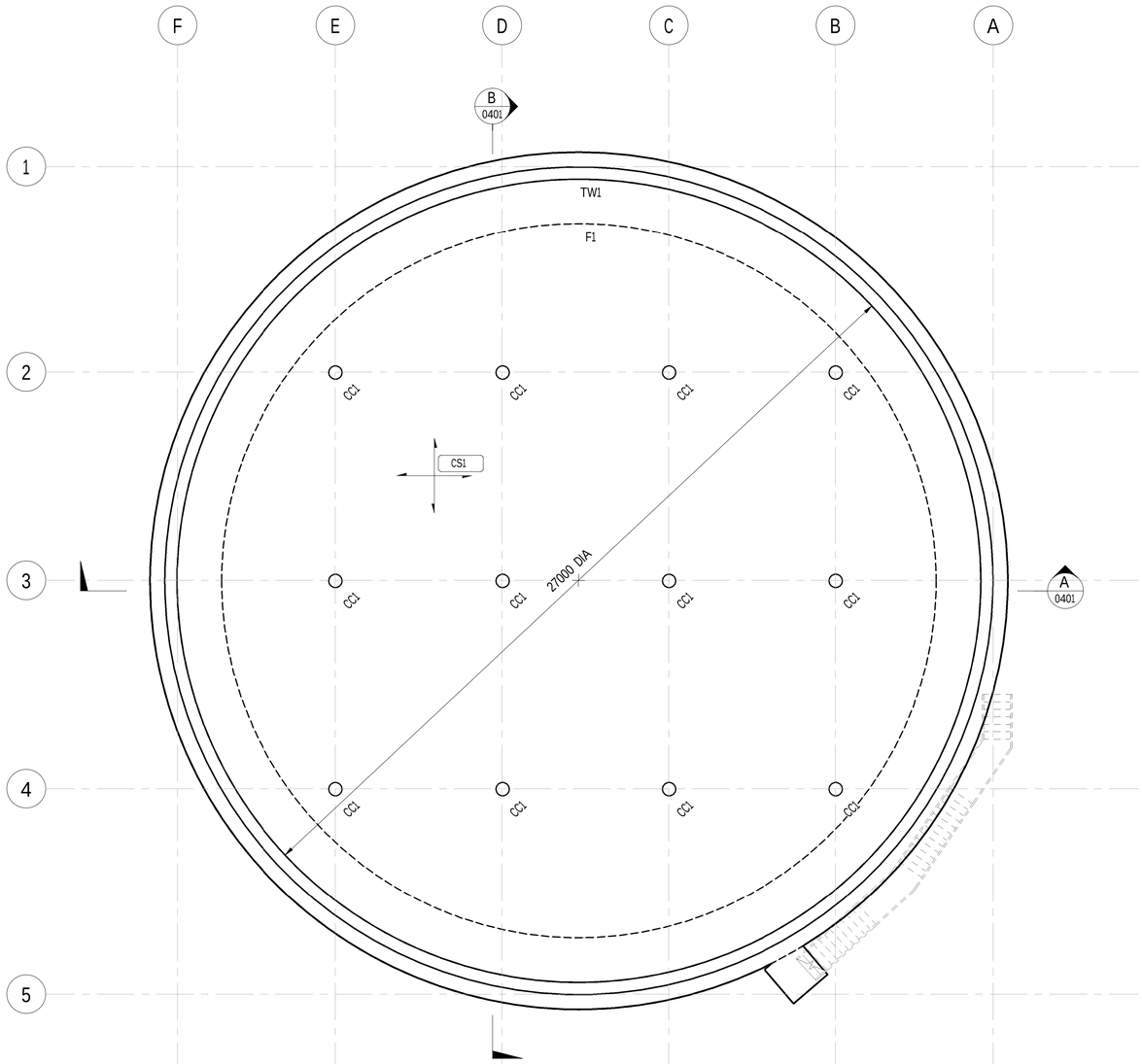

TANK BASE PLAN

SCALE 1 : 100

FOOTING SCHEDULE

MARK	THICKNESS (mm)	WIDTH x (LENGTH) (mm)	REINFORCEMENT	COMMENTS
F1	400	2400	TBC	TANK FOUNDATION EDGE BEAM
FS1	300	1500 x 1500	TBC	STAIR FOUNDATION

SLAB SCHEDULE

MARK	THICKNESS (mm)	REINFORCEMENT	COMMENTS
CS1	250	TBC	TANK BASE SLAB

TANK WALL SCHEDULE

MARK	THICKNESS (mm)	REINFORCEMENT	COMMENTS
TW1	400		

CONCRETE COLUMN SCHEDULE

MARK	DIAMETER (mm)	REINFORCEMENT	COMMENTS
CC1	450	6N20 REINFORCEMENT AND W10 HELIX 200mm PITCH	50MPa CONCRETE, 75mm COVER

SCALE 1:100 1 0 1 2 3 4 5

REVISION PANEL

REV	DATE	DRN	DETAILS	APR'D
UR2	15.05.2024		UNDER REVISION	
UR1	12.04.2024		UNDER REVISION	
UR	21.12.2023		UNDER REVISION	

CURRENT REVISION CONTRACTOR: SMEC

CURRENT REV AUTHORISED

SIGNATURE

DESIGN PANEL

DESIGNED | AUTHORISED

DRAWN | SIGNATURE

REVIEWED

CONTRACTOR: SMEC

ISSUED FOR DEVELOPMENT APPLICATION

NOT FOR CONSTRUCTION
PRELIMINARY DRAWING FOR INFORMATION ONLY

This drawing is the property of the © SOUTH AUSTRALIAN WATER CORPORATION and shall not be copied or modified in part or in whole without authorization.

EYRE PENINSULA DESALINATION PLANT
EX BHP - BILLY LIGHTS POINT
TREATED WATER TANK DESIGN
STRUCTURAL
TANK BASE LAYOUT

PROJECT DRAWING NUMBER
EPDP-700-SMC-STR-DRG-0101

A1 SHT SIZE | MAXIMO ID: P041915 | PROJECT No: A0012-0025 | UR2 REVISION

TOTAL SHEETS: | DISCIPLINE: STRUCTURAL

SUPERSEDES:

DRAWING NUMBER

SMEC PROJECT NO. 3005873

NOTE:
ROOF CLADDING AND PROFILE SHOWN INDICATIVELY

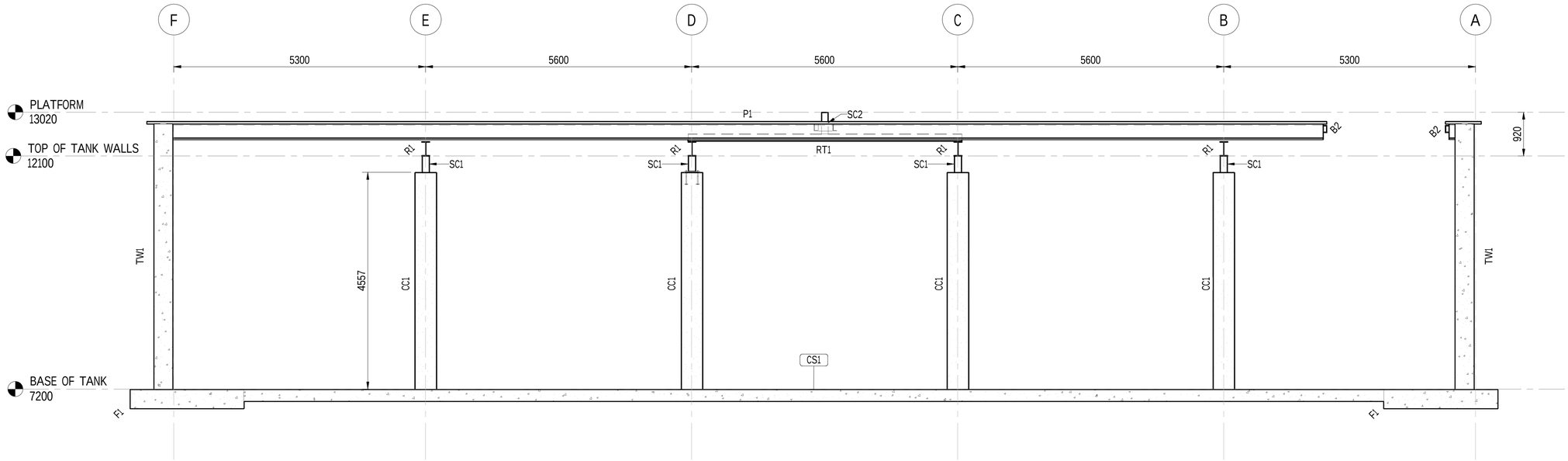

SECTION A 0101
SCALE 1 : 50

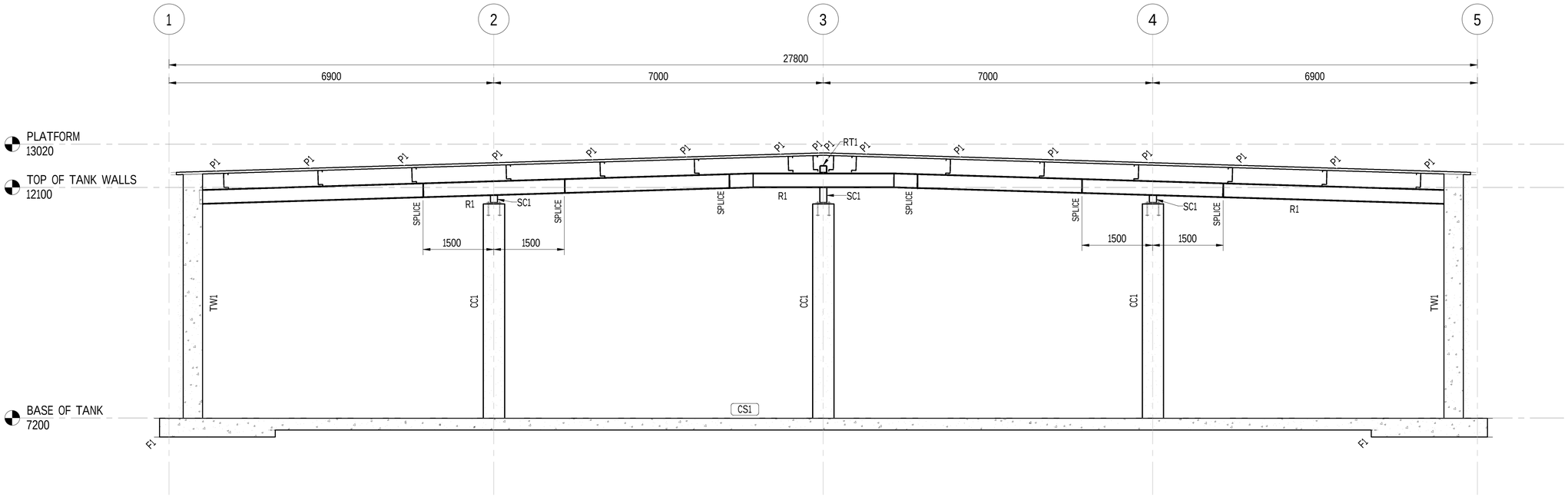

SECTION B 0101
SCALE 1 : 50

SCALE 1:50 0.5 0 1 2

ISSUED FOR DEVELOPMENT APPLICATION

NOT FOR CONSTRUCTION
PRELIMINARY DRAWING FOR INFORMATION ONLY

PROJECT DRAWING NUMBER
EPDP-700-SMC-STR-DRG-0401

REVISION PANEL

REV	DATE	DRN	DETAILS	APR'D
UR1	15.05.2024		UNDER REVISION	
UR	12.04.2024		UNDER REVISION	

CURRENT REVISION CONTRACTOR: SMEC

CURRENT REV
AUTHORISED
SIGNATURE

DESIGN PANEL

DESIGNED	AUTHORISED
DRAWN	SIGNATURE
REVIEWED	

CONTRACTOR: SMEC

Government of South Australia
SA Water

This drawing is the property of the © SOUTH AUSTRALIAN WATER CORPORATION and shall not be copied or modified in part or in whole without authorization.

EYRE PENINSULA DESALINATION PLANT
EX BHP - BILLY LIGHTS POINT
TREATED WATER TANK DESIGN
STRUCTURAL
ROOF FRAME PROFILES

A1 SHT SIZE
MAXIMO ID: P041915
PROJECT No: A0012-0025
UR1 REVISION
TOTAL SHEETS:
DISCIPLINE: STRUCTURAL
SUPERSEDES:
DRAWING NUMBER

SMEC PROJECT NO. 3005873

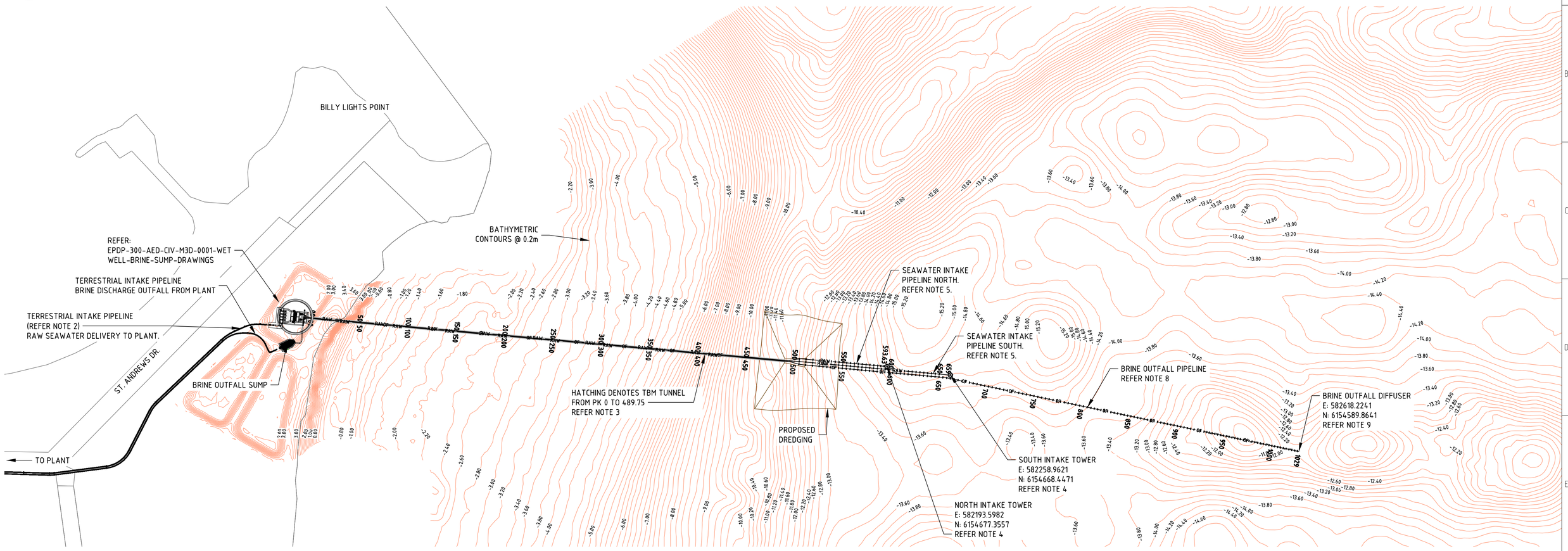

MARINE INFRASTRUCTURE -LAYOUT PLAN

SCALE 1:2000

NOTES

1. BATHYMETRY AND GEOPHYSICAL SURVEY SUPPLIED BY MES AND RELATIVE TO AHD., REFERENCE 'SADesal23_GDA2020-53_AHD_2m_MA.xyz'. GEOPHYSICAL INTERPRETATION ON DRAWING IS ONLY SHOWN FOR INDICATIVE PURPOSES, TO BE CONFIRMED BY THE CONTRACTOR.
2. TERRESTRIAL INTAKE PIPELINE BETWEEN SEAWATER INTAKE PUMP STATION AND DESALINATION PLANT TO BE DN1000 HDPE SDR21 PE100.
3. FINAL EXTENT OF SHORE ZONE CROSSING TUNNEL TO BE DEFINED FROM NEW GEOTECHNICAL SURVEY DATA.
4. INTAKE TOWER STRUCTURES (2 NO.), ONE ON OFFSHORE END OF EACH SEAWATER INTAKE PIPELINE. REFER EPDP-200-AED-CIV-M3D-0001-INTAKE-TOWERS DRAWINGS
5. SEAWATER MARINE INTAKE PIPELINES (2 NO.) TO BE DN900 SDR21 HDPE PE100.
6. ALL PIPELINES SHALL BE ACCOMODATED- WITHIN THE TUNNEL THROUGH THE SHORE ZONE CROSSING. REFER SHEET EPDP-300-AED-CIV-SKT-2001.
7. FINAL ARRANGEMENT OF MARINE PIPELINE SYSTEMS IS BASED ON PIPELINES HYDRAULICS.
8. BRINE OUTFALL PIPELINE (1 NO.) TO BE DN900 SDR21 HDPE PE100.
9. OUTFALL DIFFUSER (1 NO.) ON OFFSHORE END OF BRINE DISCHARGE PIPELINE, REFER SHEET EPDP-500-AED-CIV-SKT-1002.
10. ALL DESIGN ASPECTS TO BE CONFIRMED DURING FUTURE STAGES OF DESIGN.
11. FOR VERTICAL LEVEL DATA REFER PIPELINE LONGITUDINAL SECTION DRAWINGS:
    MARINE INTAKE PIPELINE SYSTEM - PLAN & LONG SECTION (2 DRAWINGS)
    MARINE OUTFALL PIPELINE SYSTEM - PLAN & LONG SECTION (2 DRAWINGS)
12. THE GEOGRAPHYC COORDINATE SYSTEM IS GDA2020 UTM ZONE 53S
13. THE ALTIMETRIC SYSTEM IS REFERENCED TO THEAUSTRALIAN HEIGHT DATUM (AHD)
14. THESE DRAWINGS WILL HAVE TO BE REVIEWED IN ACCORDANCE WITH THE RESULTS OF THE ONGOING MARINE GEOTECHNICAL INVESTIGATION

NOT FOR CONSTRUCTION.
PRELIMINARY DRAWING FOR
INFORMATION ONLY

ISSUED FOR DEVELOPMENT APPLICATION

EPDP-200-AED-CIV-DRG-1001

0 20 40 80 120
1 : 2,000m (A1) - 1 : 4,000m (A3)

REVISION PANEL

REV	DATE	DRN	DETAILS	APR'D
UR3	29/05/24	PRL	UPDATE TO CLIENTS COMMENTS	THG
UR2	15/05/24	PRL	AS INDICATED	THG
UR1	12/04/24	PRL	AS INDICATED	THG

CURRENT REVISION CONTRACTOR:

CURRENT REV AUTHORISED

SIGNATURE

DESIGN PANEL

DESIGNED | AUTHORISED
DRAWN | SIGNATURE
REVIEWED
CONTRACTOR:

Government of South Australia
SA Water

This drawing is the property of the SOUTH AUSTRALIAN WATER CORPORATION and shall not be copied or modified in part or in whole without authorization.

EYRE PENINSULA DESALINATION PLANT
MARINE INTAKE PUMP STATION AND PIPELINES
MARINE
MARINE INFRASTRUCTURE
LAYOUT PLAN

A1 SHT SIZE | MAXIMO ID: | PROJECT No: | UR3 REVISION
TOTAL SHEETS: | DISCIPLINE:
SUPERSEDES:
DRAWING NUMBER
— — —
YEAR NUMBER SHEET

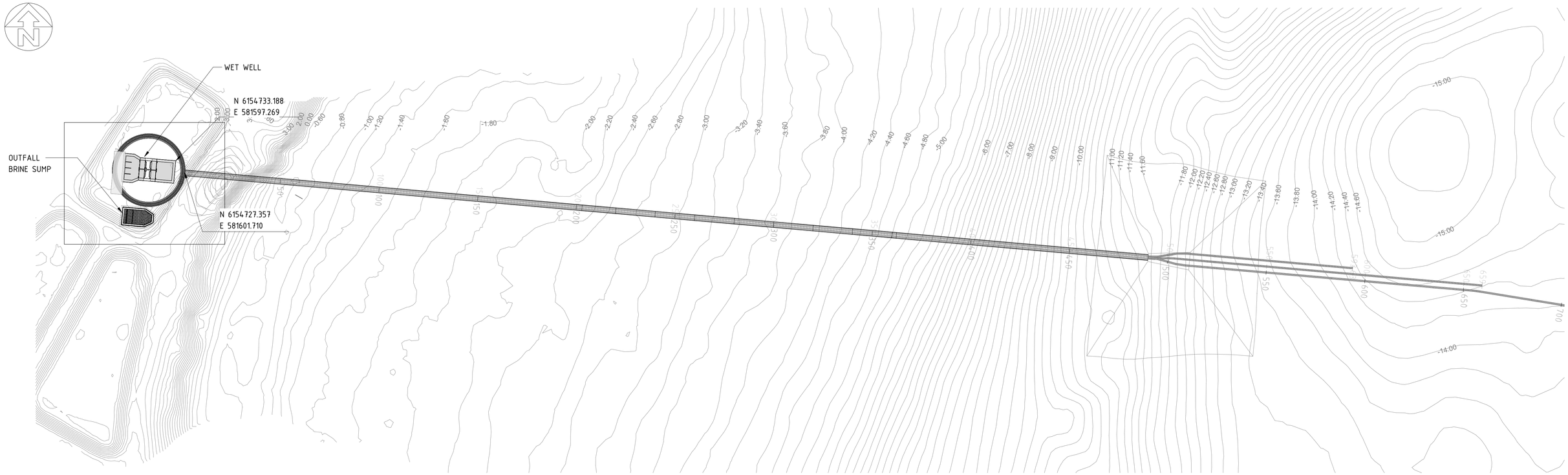

WET WELL, BRINE SUMP & SHAFT - GENERAL ARRANGEMENT

SCALE 1 : 1000

0 20000 40000 60000 80000 100000mm

20000

SCALE 1:1000

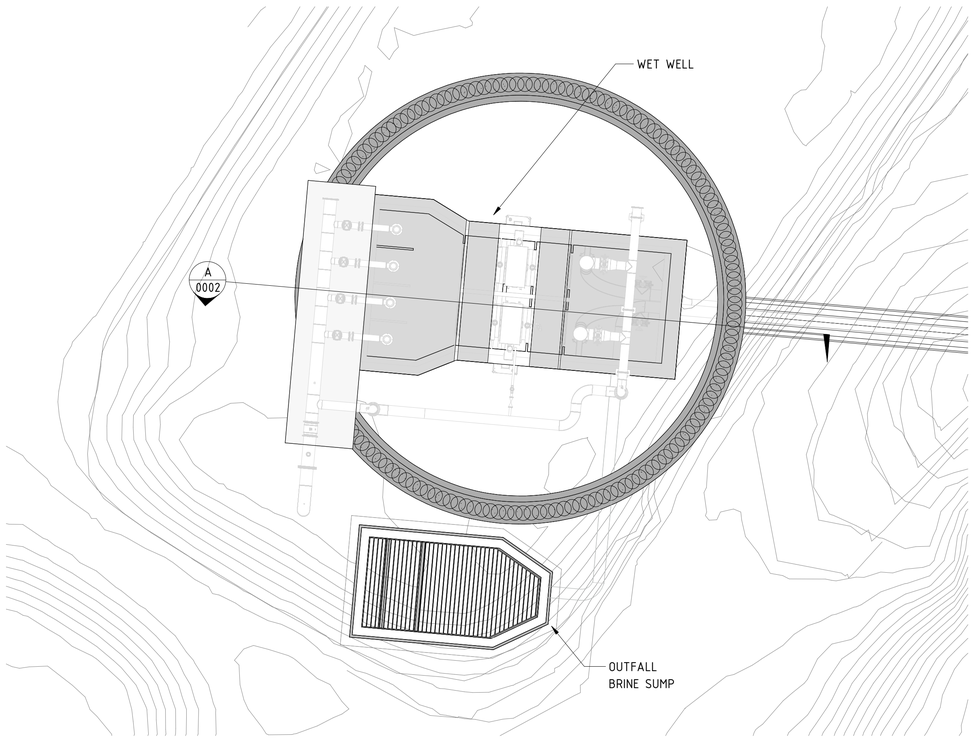

WET WELL, BRINE SUMP & SHAFT- PLAN VIEW

SCALE 1 : 250

0 10000 20000 30000 40000 50000mm

10000

SCALE 1:500

NOT FOR CONSTRUCTION.
PRELIMINARY DRAWING FOR
INFORMATION ONLY

ISSUED FOR DEVELOPMENT APPLICATION

EPDP-300-AED-CIV-DRG-1001

REVISION PANEL					
REV	DATE	DRN	DETAILS	APR'D	CURRENT REV AUTHORISED
					SIGNATURE
UR2	29.05.24	RCO	UPDATED TO CLIENT COMMENTS		
UR1	17.05.24	RCO	UNDER REVIEW		
CURRENT REVISION CONTRACTOR:			CURRENT REV PROJECT:		

DESIGN PANEL	
DESIGNED	AUTHORISED
DRAWN	SIGNATURE
REVIEWED	
CONTRACTOR:	

Government of South Australia

SA Water

This drawing is the property of the © SOUTH AUSTRALIAN WATER CORPORATION and shall not be copied or modified in part or in whole without authorization.

EYRE PENINSULA DESALINATION PLANT
MARINE INTAKE PUMP STATION AND INLAND INTAKE PIPELINE
CIVIL
WET WELL
GENERAL ARRANGEMENT

A1 SHT SIZE | TOTAL SHEETS: X | PROJECT No: | UR2 REVISION

MAXIMO ID:

SUPERSEDES:

DRAWING NUMBER

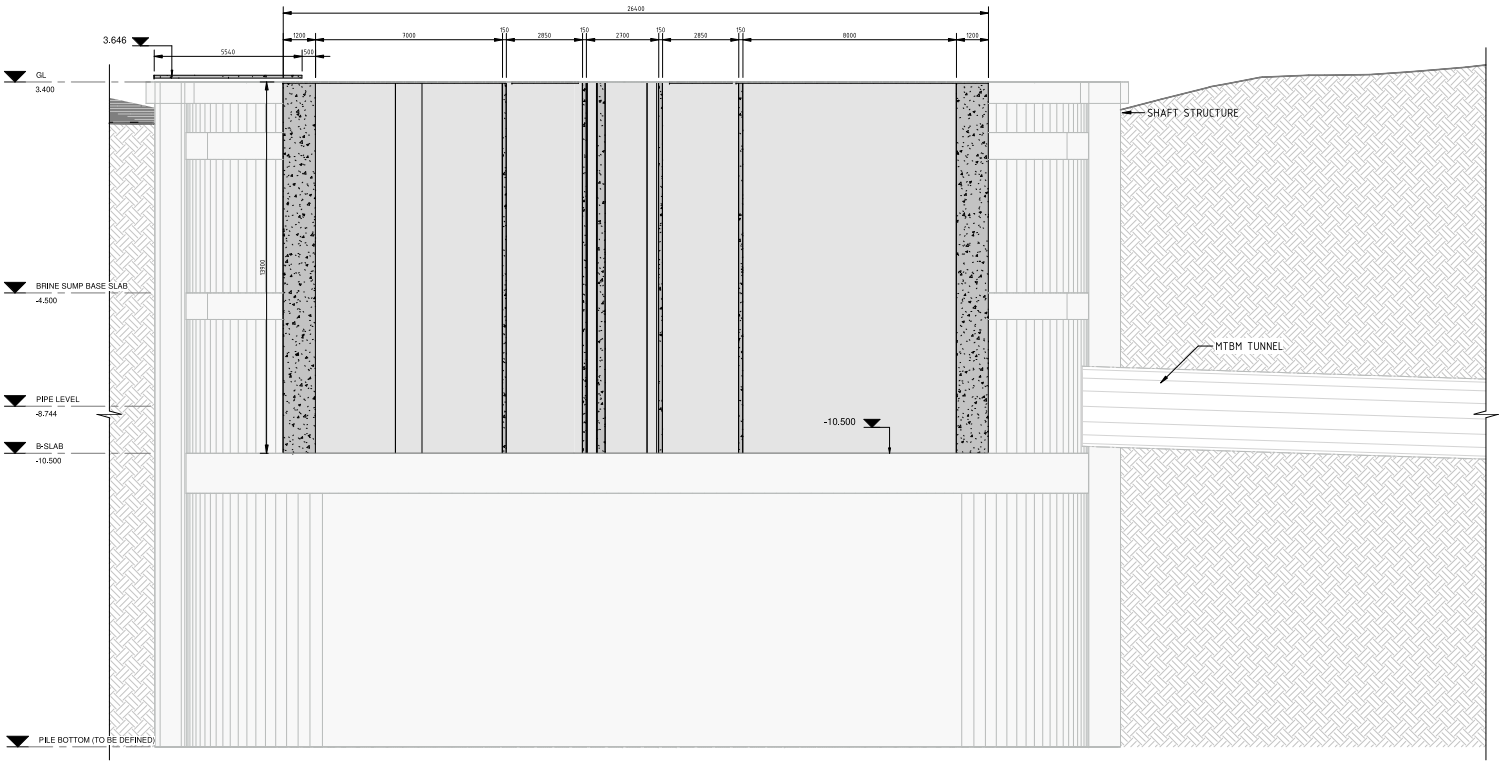

WET WELL SECTION

SCALE 1 : 100

NOT FOR CONSTRUCTION
PRELIMINARY DRAWING FOR
INFORMATION ONLY

WET WELL STRUCTURE		
Description	Thickness	Kg/m3
External Wall	1200	120
Internal Wall	80x100	100
Foundation Slab	1200	180

0 2000 4000 6000 8000 10000mm
2000
SCALE 1:100

REVISION PANEL					
REV	DATE	DRN	DETAILS	APR'D	CURRENT REV AUTHORISED
					SIGNATURE
UR	17.05.24		UNDER REVIEW		
CURRENT REVISION CONTRACTOR:					

DESIGN PANEL	
DESIGNED	AUTHORISED
DRAWN	SIGNATURE
REVIEWED	
CONTRACTOR:	

SA Water

This drawing is the property of the © SOUTH AUSTRALIAN WATER CORPORATION and shall not be copied or modified in part or in whole without authorization.

ISSUED FOR DEVELOPMENT APPLICATION

EYRE PENINSULA DESALINATION PLANT
MARINE INTAKE PUMP STATION AND INLAND INTAKE PIPELINE
STRUCTURAL
WET WELL - SECTION & ELEVATION
-

EPDP-300-AED-CIV-DRG-1003

A1 SHT SIZE | TOTAL SHEETS: X | PROJECT No: | 0.1A REVISION

MAXIMO ID:

SUPERSEDES:

DRAWING NUMBER

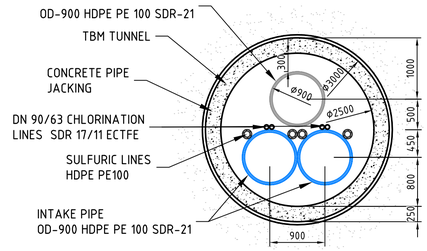

STRETCH 1 - 0+000 TO 489.75 M

SCALE 1:50

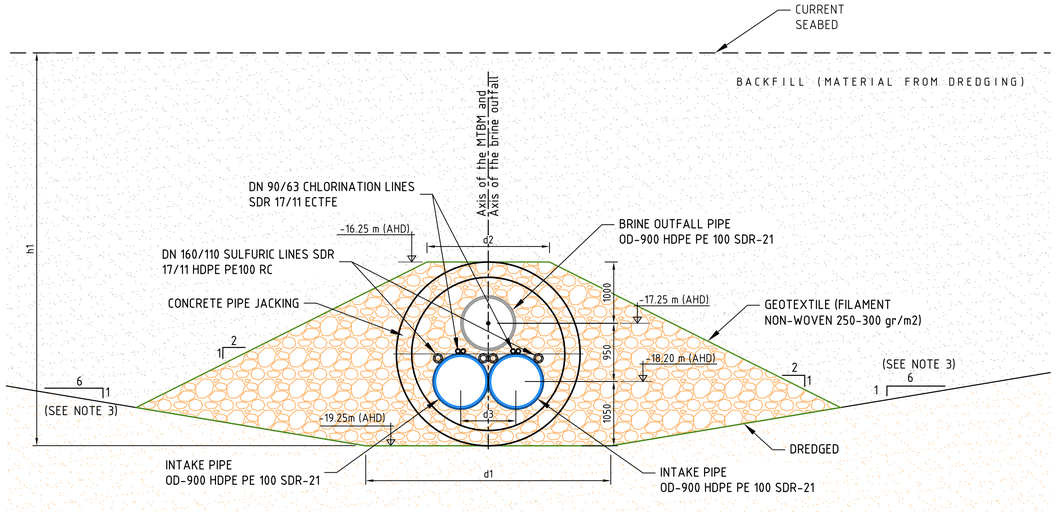

SECTION FOR 0+489. STRETCH 2: 0+489.75 TO 0+509.17

SCALE 1:50

PK	h1 (mm)	d1 (mm)	d2 (mm)	d3 (mm)	d4 (*) (mm)
0+489.75	9110 (**)	4000	2000	950	0
0+509.17	8000 (**)	8900	6000	3000	3670 (*)

Notes:
(**) Approximate value. Refer to the drawings:
- Intake Pipeline - Plan & Longitudinal Section
- Outfall Pipeline - Plan & Longitudinal Section
(*) See: Stretch 3

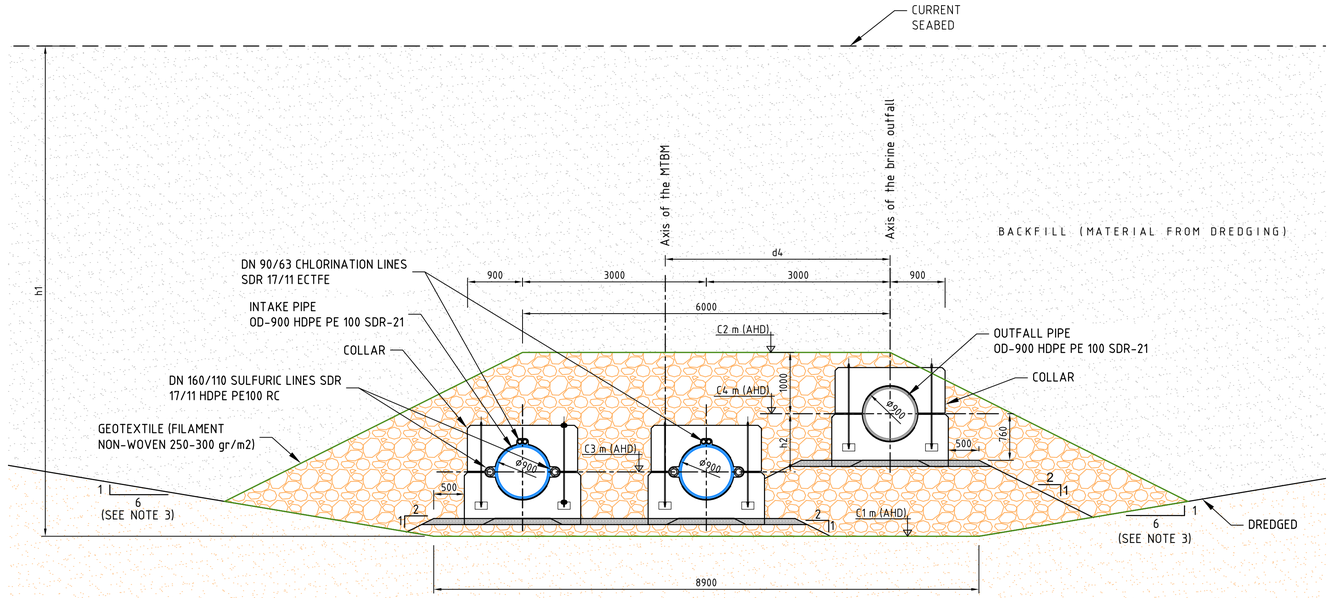

SECTION FOR 0+509. STRETCH 3: 0+509.17 TO 532.75 (A)

SCALE 1:50

PK	C1 m AHD	C2 m AHD	C3 m AHD	C4 m AHD	h1 (mm)	h2 (mm)	d4 (*) (mm)
0+509.17	-19.25	-16.25	-18.20	-17.25	8000 (**)	950	3670
0+532.75	-15.58	-12.07	-13.07	-13.07	3112 (**)	0	3670

Notes:
(**) Approximate value. Refer to the drawings:
- Intake Pipeline - Plan & Longitudinal Section
- Outfall Pipeline - Plan & Longitudinal Section

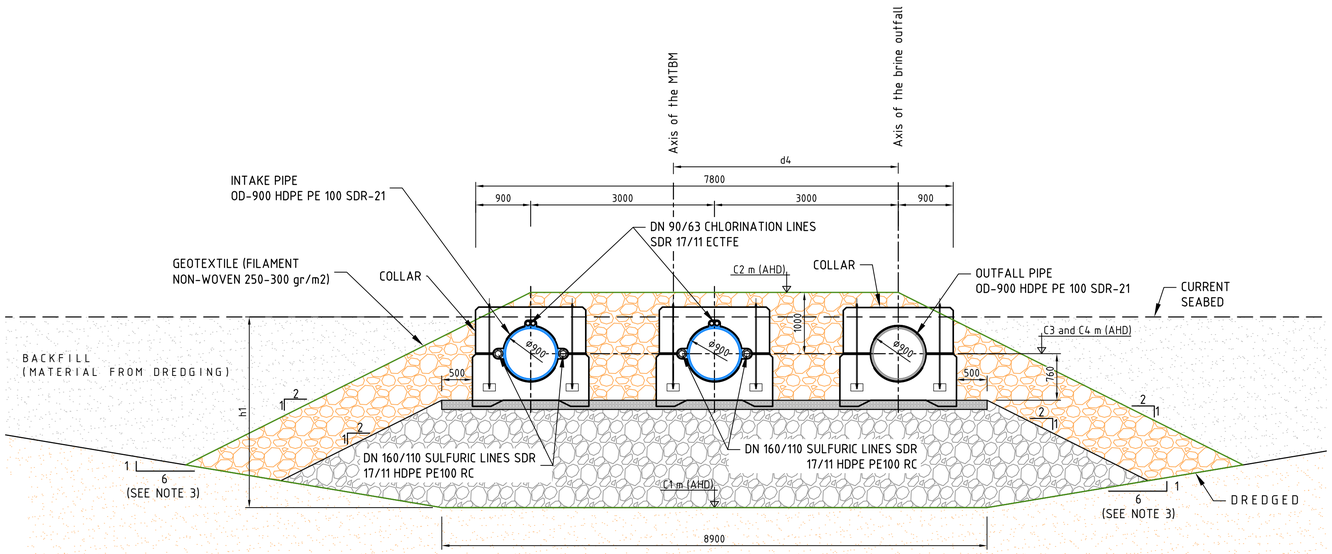

SECTION FOR: 0+532.75 (A)

SCALE 1:50

ISSUED FOR DEVELOPMENT APPLICATION

EPDP-200-AED-CIV-DRG-3001

NOT FOR CONSTRUCTION
PRELIMINARY DRAWING FOR INFORMATION ONLY

CONCRETE

SEDIMENT

BACKFILL SOIL / SOIL CLASS: SC-I MATERIAL ACORDING TO ASTM D-2487 CLASSIFICATION, THE MAXIMUM SIZE OF THE AGGREGATE IN THE VICINITY OF THE PIPES WILL BE 13 mm

GRAVEL BED, PARTICLE SIZE: 20 to 40 mm THICKNESS = 0.15 m

ROCK 60 TO 300 KG

NOTES

1. THE ALTIMETRIC SYSTEM IS IN METERS REFERENCED TO THE AUSTRALIAN HEIGHT DATUM.
2. THE DIMENSIONS ARE IN MILLIMETERS
3. THE DREDGING SLOPES WILL BE AJUSTED BASED ON THE GEOTHECNICAL STUDIES TO BE CONDUCTED
4. THESE DRAWINGS WILL HAVE TO BE REVIEWED IN ACCORDANCE WITH THE RESULTS OF THE ONGOING MARINE GEOTECHNICAL INVESTIGATION

0 0.02 0.04 0.08 0.12
1 : 2m (A1) - 1 : 4m (A3)

REVISION PANEL

REV	DATE	DRN	DETAILS	APR'D
UR	17.05.24		UNDER REVIEW	

CURRENT REVISION CONTRACTOR:

CURRENT REV AUTHORISED

SIGNATURE

DESIGN PANEL

DESIGNED — AUTHORISED
DRAWN — SIGNATURE
REVIEWED
CONTRACTOR:

Government of South Australia
SA Water

This drawing is the property of the SOUTH AUSTRALIAN WATER CORPORATION and shall not be copied or modified in part or in whole without authorization.

EYRE PENINSULA DESALINATION PLANT
MARINE INTAKE PIPELINES AND INTAKE STRUCTURE
CIVIL
INTAKE PIPELINE
TYPE SECTIONS AND DETAILS

A1 SHT SIZE
MAXIMO ID:
PROJECT No:
UR REVISION
TOTAL SHEETS:
DISCIPLINE:
SUPERSEDES:
DRAWING NUMBER
YEAR NUMBER SHEET

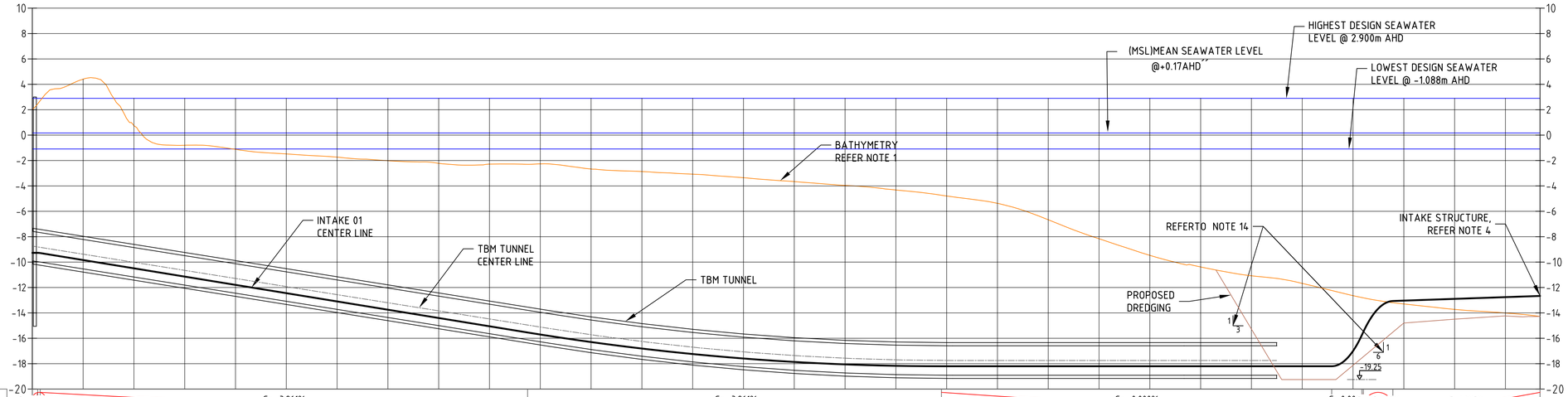

DATUM (mAHD): -40.00

| | | |

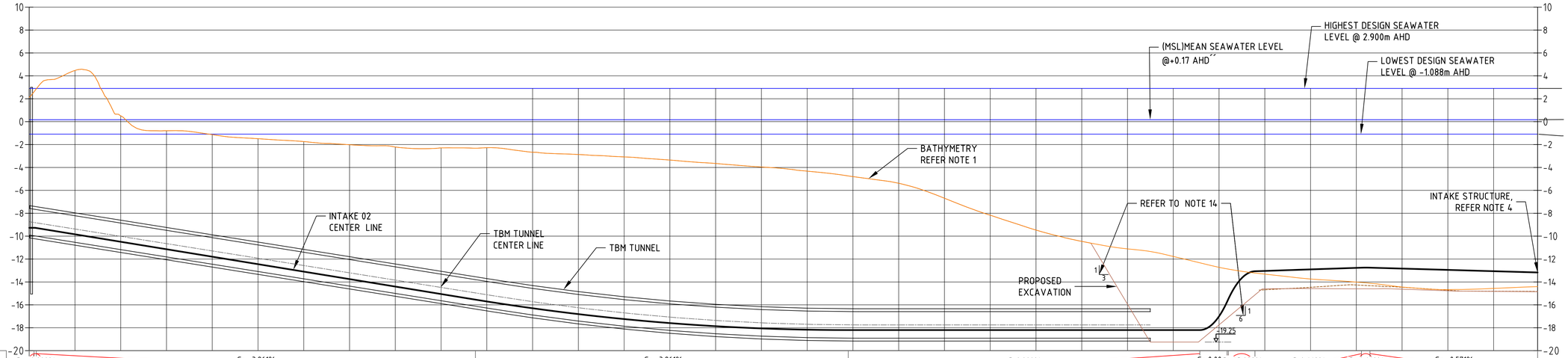

DATUM (mAHD): -40.00

PIPE GRADIENT	G= -0.000% R= 30.00; G= -3.261% L= 191.927; G= -3.261% R= 5000.00; G=0.000% L= 153.641; G= 0.00 R= 30.; G= 43.092% R= 30.00; G=0.668% L= 46.552; G= 0.668% R= 300.00; G= -0.571% L= 73.270
PIPE CENTER LINE (m AHD)	-9.271, -9.838, -10.490, -11.142, -11.795, -12.447, -13.099, -13.751, -14.403, -15.055, -15.705, -16.297, -16.809, -17.241, -17.593, -17.865, -18.056, -18.168, -18.200, -18.200, -18.200, -18.200, -18.200, -18.200, -18.200, -18.200, -17.000, -13.036, -12.902, -12.769, -12.832, -12.946, -13.060, -13.170
BATHYMETRY (m AHD)	-2.123, 4.470, 0.512, -0.792, -1.133, -1.488, -1.736, -2.015, -2.213, -2.292, -2.274, -2.672, -2.869, -3.079, -3.353, -3.652, -3.960, -4.322, -4.798, -5.380, -6.687, -8.170, -9.467, -10.455, -11.111, -11.773, -12.722, -13.316, -13.741, -14.009, -14.444, -14.665, -14.563, -14.408
PIPE COVER (m)	11.394, 14.308, 11.002, 10.350, 10.662, 10.959, 11.362, 11.736, 12.190, 12.763, 13.431, 13.625, 13.940, 14.162, 14.240, 14.213, 14.096, 13.846, 13.402, 12.821, 11.514, 10.030, 8.734, 7.746, 7.090, 6.428, 4.279
CHAINAGE (m)	0.000, 20.000, 40.000, 60.000, 80.000, 100.000, 120.000, 140.000, 160.000, 180.000, 200.000, 220.000, 240.000, 260.000, 280.000, 300.000, 320.000, 340.000, 360.000, 380.000, 400.000, 420.000, 440.000, 460.000, 480.000, 500.000, 520.000, 540.000, 560.000, 580.000, 600.000, 620.000, 640.000, 659.233
DREDGE LEVEL	-15.945, -19.351, -17.748, -14.598, -14.574, -14.598, -14.631, -14.772, -14.823, -14.847

LONGITUDINAL PROFILE - OD900 HDPE SEAWATER INTAKE 02 PIPELINE (SOUTH)

HORIZONTAL SCALE 1 : 1000

VERTICAL SCALE 1 : 200

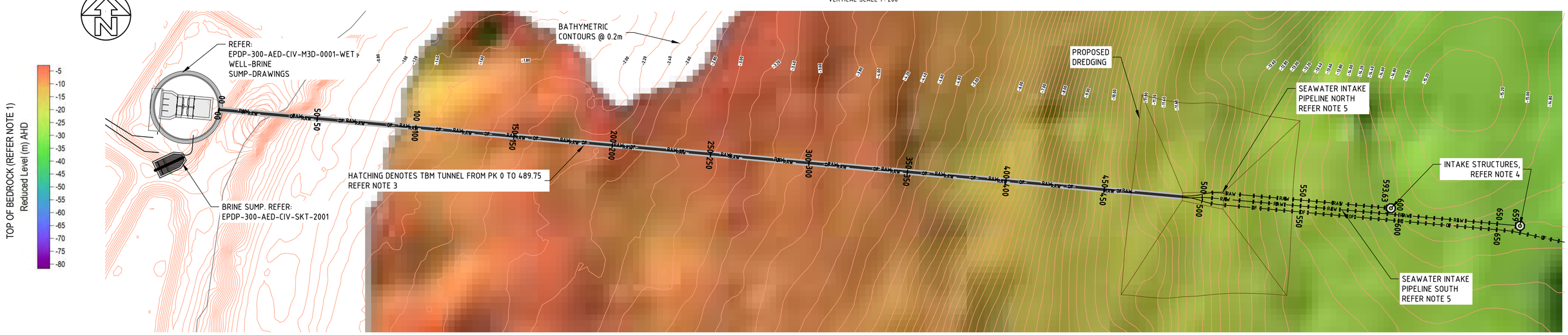

MARINE INTAKE PIPELINE SYSTEM PLAN

SCALE 1:1000

NOTES

1. BATHYMETRY AND GEOPHYSICAL SURVEY SUPPLIED BY MES AND RELATIVE TO AHD., REFERENCE 'SADesal23_GDA2020-53_AHD_2m_MA.xyz'. GEOPHYSICAL INTERPRETATION ON DRAWING IS ONLY SHOWN FOR INDICATIVE PURPOSES ONLY, TO BE CONFIRMED BY THE CONTRACTOR.
2. TERRESTRIAL INTAKE PIPELINE BETWEEN SEAWATER INTAKE PUMP STATION AND DESALINATION PLANT TO BE DN1000 HDPE SDR21 PE100.
3. FINAL EXTENT OF SHORE ZONE CROSSING TUNNEL TO BE DEFINED FROM NEW GEOTECHNICAL SURVEY DATA.
4. INTAKE TOWER STRUCTURES (2 NO.), ONE ON OFFSHORE END OF EACH SEAWATER INTAKE PIPELINE. REFER EPEDP-200-AED-CIV-M3D-0001-INTAKE TOWERS DRRAWINGS
5. SEAWATER MARINE INTAKE PIPELINES (2 NO.) TO BE DN900 SDR21 HDPE PE100.
6. ALL PIPELINES SHALL BE ACCOMODATED- WITHIN THE TUNNEL THROUGH THE SHORE ZONE CROSSING. REFER SHEET EPDP-300-AED-CIV-SKT-2001.
7. FINAL ARRANGEMENT OF MARINE PIPELINE SYSTEMS IS BASED ON PIPELINES HYDRAULICS.
8. BRINE DISCHARGE PIPELINE (1 NO.) TO BE DN900 SDR21 HDPE PE100.
9. OUTFALL DIFFUSER (1 NO.) ON OFFSHORE END OF BRINE DISCHARGE PIPELINE.
10. ALL DESIGN ASPECTS TO BE CONFIRMED DURING FUTURE STAGES OF DESIGN.
11. THE GEOGRAPHYC COORDINATE SYSTEM GDA 2020 UTM ZONE 53S
12. THE ALTIMETRIC SYSTEM REFERENCED TO THE AUSTRALIAN HEIGHT DATUM (AHD)
13. REFER TO THIS DRAWINGS ALONGSIDE: INTAKE PIPELINE. TYPE SECTIONS AND DETAILS (EPDP-200-AED-CIV-DRG-3001) AND OUTFALL PIPELINE. TYPE SECTIONS AND DETAILS (EPDP-500-AED-CIV-DRG-1003)
14. THE DREDGING SLOPES WILL BE AJUSTED BASED ON THE GEOTHECNICAL STUDIES TO BE CONDUCTED
15. THESE DRAWINGS WILL HAVE TO BE REVIEWED IN ACCORDANCE WITH THE RESULTS OF THE ONGOING MARINE GEOTECHNICAL INVESTIGATION

0 0.02 0.04 0.08 0.12
1 : 2m (A1) - 1 : 4m (A3)

0 0.02 0.04 0.08 0.12
1 : 2m (A1) - 1 : 4m (A3)

NOT FOR CONSTRUCTION
PRELIMINARY DRAWING FOR INFORMATION ONLY

EPDP-200-AED-CIV-DRG-2002

ISSUED FOR DEVELOPMENT APPLICATION

REVISION PANEL				
REV	DATE	DRN	DETAILS	APR'D
UR	17.05.24		UNDER REVIEW	
CURRENT REVISION CONTRACTOR:				

CURRENT REV AUTHORISED

SIGNATURE

DESIGN PANEL	
DESIGNED	AUTHORISED
DRAWN	SIGNATURE
REVIEWED	
CONTRACTOR:	

Government of South Australia

SA Water

This drawing is the property of the SOUTH AUSTRALIAN WATER CORPORATION and shall not be copied or modified in part or in whole without authorization.

EYRE PENINSULA DESALINATION PLANT
MARINE INTAKE PIPELINES AND INTAKE STRUCTURE
CIVIL
MARINE INTAKE PIPELINE SYSTEM
PLAN & LONG SECTION SHEET 2

A1 SHT SIZE | MAXIMO ID: | PROJECT No: | UR REVISION

TOTAL SHEETS: | DISCIPLINE:

SUPERSEDES:

DRAWING NUMBER

YEAR NUMBER SHEET

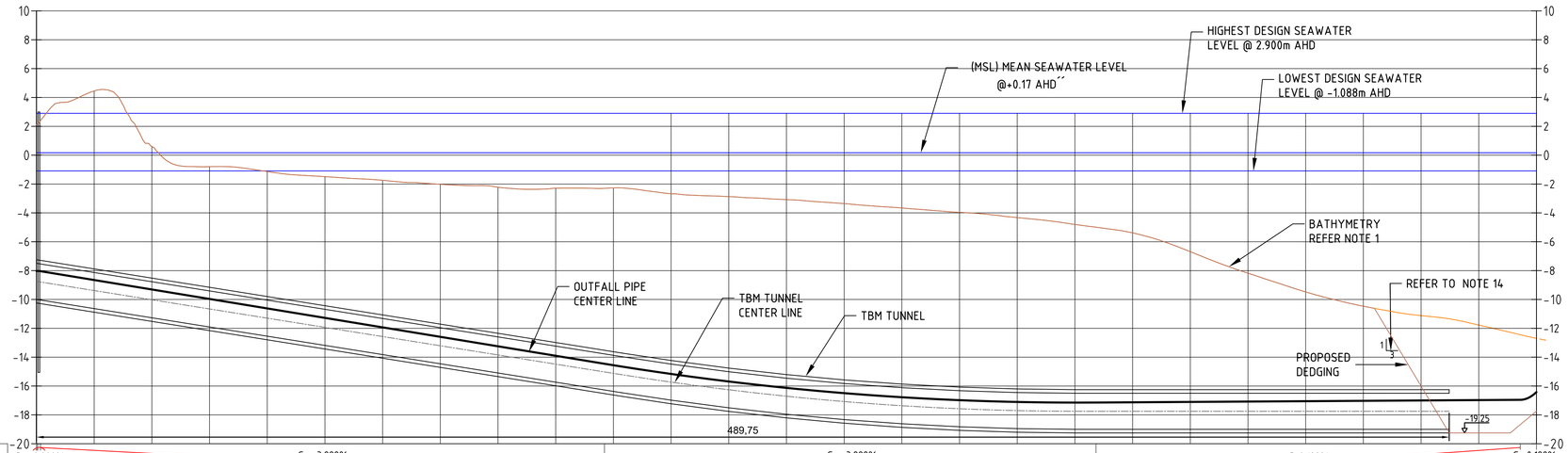

DATUM (mAHD): -40.00

| | | |

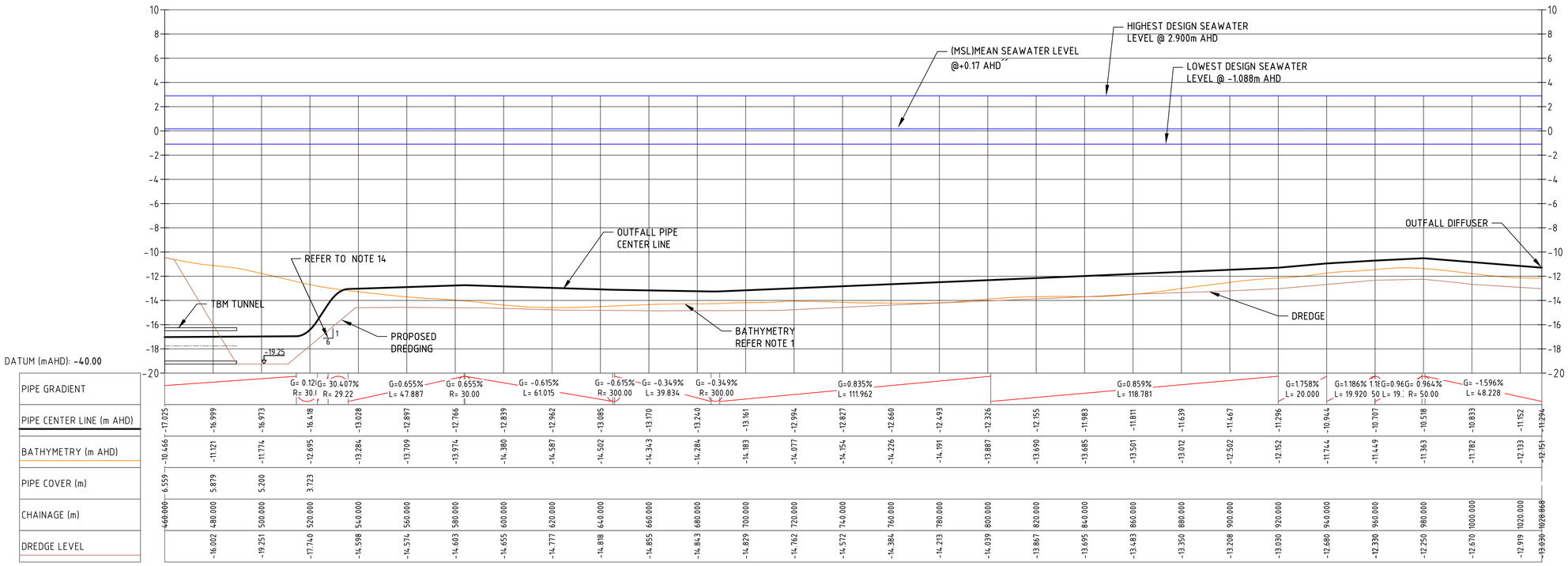

LONGITUDINAL PROFILE - OD900 HDPE BRINE OUTFALL PIPELINE

HORIZONTAL SCALE 1 : 1000

VERTICAL SCALE 1 : 200

NOTES

1. BATHYMETRY AND GEOPHYSICAL SURVEY SUPPLIED BY MES AND RELATIVE TO AHD., REFERENCE 'SADesal23_GDA2020-53_AHD_2m_MA.xyz'. GEOPHYSICAL INTERPRETATION ON DRAWING IS ONLY SHOWN FOR INDICATIVE PURPOSES, TO BE CONFIRMED BY THE CONTRACTR
2. TERRESTRIAL INTAKE PIPELINE BETWEEN SEAWATER INTAKE PUMP STATION AND DESALINATION PLANT TO BE DN1000 HDPE SDR21 PE100.
3. FINAL EXTENT OF SHORE ZONE CROSSING TUNNEL TO BE DEFINED FROM NEW GEOTECHNICAL SURVEY DATA.
4. INTAKE TOWER STRUCTURES (2 NO.), ONE ON OFFSHORE END OF EACH SEAWATER INTAKE PIPELINE. REFER SHEET EPDP-200-AED-CIV-SKT-2002 FOR INTAKE STRUCTURE DETAILS.
5. SEAWATER MARINE INTAKE PIPELINES (2 NO.) TO BE DN900 SDR21 HDPE PE100.
6. ALL PIPELINES SHALL BE ACCOMODATED- WITHIN THE TUNNEL THROUGH THE SHORE ZONE CROSSING. REFER SHEET EPDP-300-AED-CIV-SKT-2001.
7. FINAL ARRANGEMENT OF MARINE PIPELINE SYSTEMS IS BASED ON PIPELINES HYDRAULICS.
8. BRINE OUTFALL PIPELINE (1 NO.) TO BE DN900 SDR21 HDPE PE100.
9. OUTFALL DIFFUSER (1 NO.) ON OFFSHORE END OF BRINE DISCHARGE PIPELINE, REFER SHEET EPDP-500-AED-CIV-SKT-1002.
10. ALL DESIGN ASPECTS TO BE CONFIRMED DURING FUTURE STAGES OF DESIGN
11. THE GEOGRAPHYC COORDINATE SYSTEM GDA 2020 UTM ZONE 53S
12. THE ALTIMETRIC SYSTEM REFERENCED TO THE AUSTRALIAN HEIGHT DATUM (AHD)
13. REFER TO THIS DRAWINGS ALONGSIDE: INTAKE PIPELINE. TYPE SECTIONS AND DETAILS (EPDP-200-AED-CIV-DRG-3001) AND OUTFALL PIPELINE. TYPE SECTIONS AND DETAILS (EPDP-500-AED-CIV-DRG-1003)
14. 14.THE DREDGING SLOPES WILL BE AJUSTED BASED ON THE GEOTHECNICAL STUDIES TO BE CONDUCTED.
15. THESE DRAWINGS WILL HAVE TO BE REVIEWED IN ACCORDANCE WITH THE RESULTS OF THE ONGOING MARINE GEOTECHNICAL INVESTIGATION

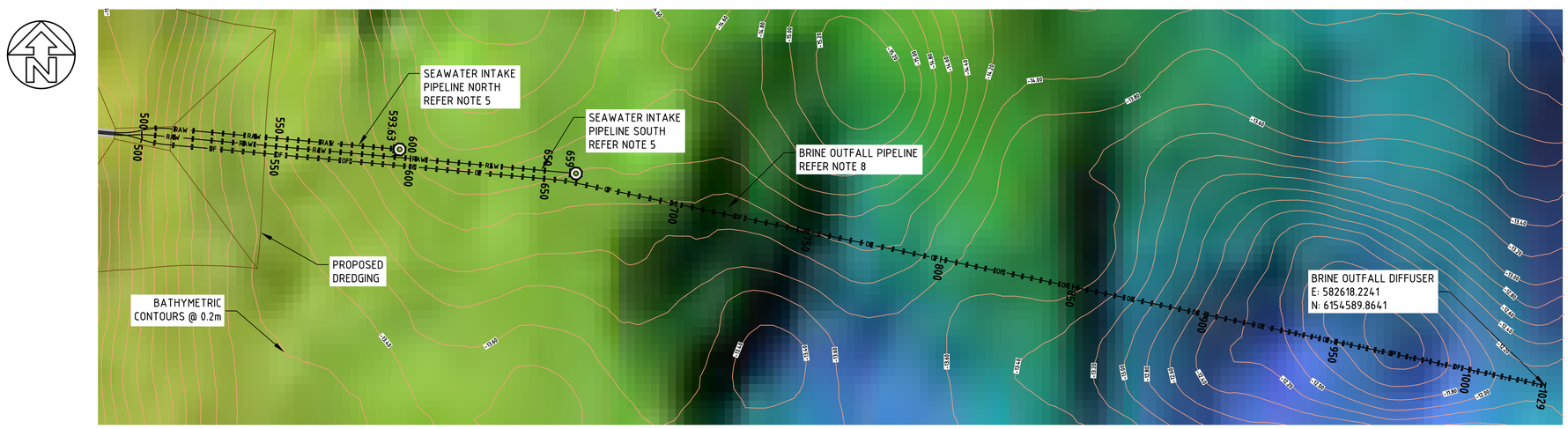

MARINE OUTFALL PIPELINE SYSTEM PLAN

SCALE 1:1000

0 0.02 0.04 0.08 0.12
1 : 2m (A1) - 1 : 4m (A3)

0 0.02 0.04 0.08 0.12
1 : 2m (A1) - 1 : 4m (A3)

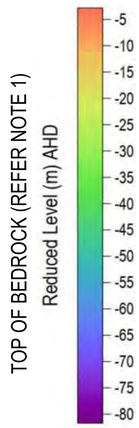

NOT FOR CONSTRUCTION
PRELIMINARY DRAWING FOR INFORMATION ONLY

EPDP-500-AED-CIV-DRG-1002

ISSUED FOR DEVELOPMENT APPLICATION

REVISION PANEL				
REV	DATE	DRN	DETAILS	APR'D
UR	17.05.24		UNDER REVIEW	

CURRENT REVISION CONTRACTOR:

CURRENT REV AUTHORISED

SIGNATURE

DESIGN PANEL: DESIGNED / AUTHORISED / DRAWN / SIGNATURE / REVIEWED / CONTRACTOR:

Government of South Australia — SA Water

This drawing is the property of the SOUTH AUSTRALIAN WATER CORPORATION and shall not be copied or modified in part or in whole without authorization.

EYRE PENINSULA DESALINATION PLANT
MARINE BRINE DISCHARGE PIPELINE AND OUTFALL STRUCTURE
CIVIL
MARINE OUTFALL PIPELINE SYSTEM
PLAN & LONG SECTION SHEET 2

A1 SHT SIZE | MAXIMO ID: | PROJECT No: | UR REVISION
TOTAL SHEETS: | DISCIPLINE:
SUPERSEDES:
DRAWING NUMBER
YEAR NUMBER SHEET

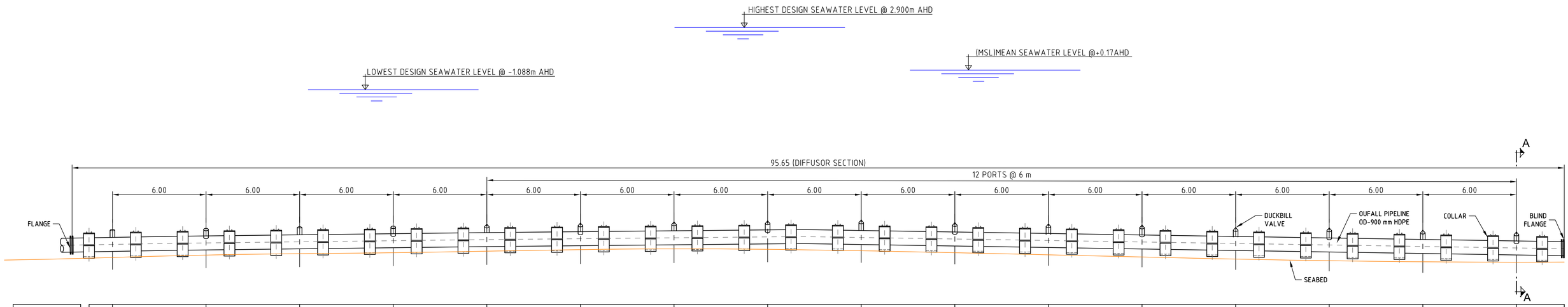

LEVEL PORT (m AHD)	Port Reservation -10.049	Port Reservation -9.985	Port Reservation -9.883	Port Reservation -9.843	Port: 12 -9.713	Port: 11 -9.642	Port: 10 -9.572	Port: 09 -9.504	Port: 08 -9.447	Port: 07 -9.615	Port: 06 -9.699	Port: 05 -9.774	Port: 04 -9.934	Port: 03 -9.957	Port: 02 -10.104	Port: 01 -10.219	Blind Flange
BATHYMETRY (m AHD)	-11.856	-11.704	-11.613	-11.550	-11.452	-11.353	-11.305	-11.333	-11.425	-11.551	-11.686	-11.824	-11.958	-12.062	-12.132	-12.162	-12.150
CHAINAGE (m)	935.80	941.80	947.80	953.80	959.80	965.80	971.80	977.80	983.80	989.80	995.80	1001.80	1007.80	1013.80	1019.80	1025.80	1028.87

LONGITUDINAL PROFILE: BRINE OUFALL DIFFUSER

SCALE 1:125

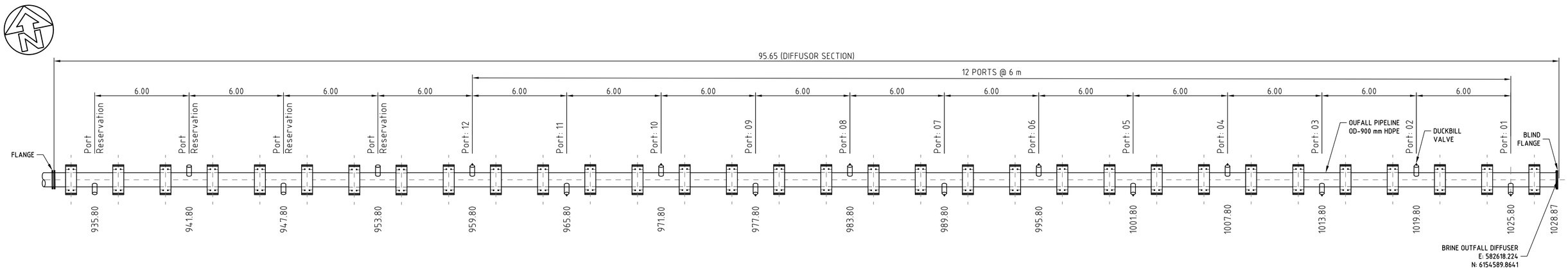

BRINE OUFALL DIFFUSER PLAN

SCALE 1:125

NOT FOR CONSTRUCTION
PRELIMINARY DRAWING FOR INFORMATION ONLY

NOTES

1. THESE DRAWINGS WILL HAVE TO BE REVIEWED ON ACCORDANCE WITH THE RESULTS OF THE ONGOING MARINE GEOTECHNICAL INVESTIGATION

0 0.02 0.04 0.08 0.12
1 : 2m (A1) - 1 : 4m (A3)

ISSUED FOR DEVELOPMENT APPLICATION

EPDP-500-AED-CIV-DRG-2001

REVISION PANEL

REV	DATE	DRN	DETAILS	APR'D
UR	17.05.24		UNDER REVIEW	

CURRENT REVISION CONTRACTOR:

CURRENT REV AUTHORISED

SIGNATURE

DESIGN PANEL

DESIGNED | AUTHORISED
DRAWN | SIGNATURE
REVIEWED
CONTRACTOR:

Government of South Australia
SA Water

This drawing is the property of the SOUTH AUSTRALIAN WATER CORPORATION and shall not be copied or modified in part or in whole without authorization.

EYRE PENINSULA DESALINATION PLANT
MARINE BRINE DISCHARGE PIPELINE AND OUTFALL STRUCTURE
CIVIL
OUTFALL DIFUSER
GENERAL ARRANGEMENT

A1 SHT SIZE | MAXIMO ID: | PROJECT No: | UR REVISION
TOTAL SHEETS: | DISCIPLINE:
SUPERSEDES:
DRAWING NUMBER
YEAR NUMBER SHEET

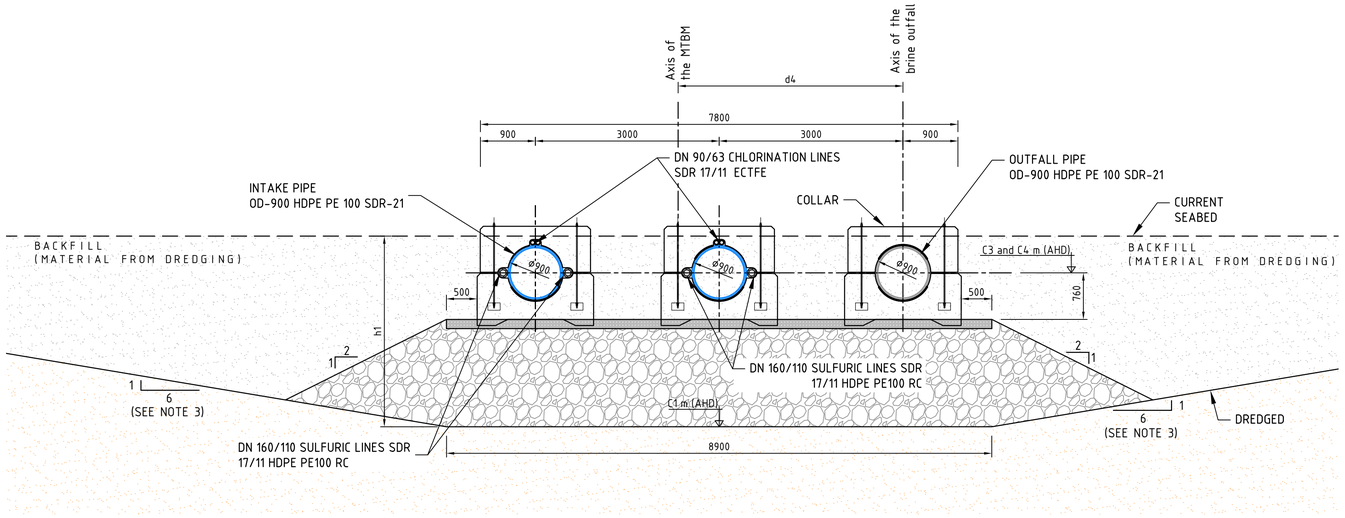

PK	C1 m AHD	C3 m AHD	h1 (mm)
0+532.75	-15.58	-13.07	3112 (**)
0+552.80	-14.70	-12.92	991 (**)

Notes:
(**) Approximate value. Refer to the drawings:
- Intake Pipeline - Plan & Longitudinal Section
- Outfall Pipeline - Plan & Longitudinal Section

SECTION FOR 0+532.75 (4A'). STRETCH 4: 0+532.75 (A') TO 0+552.80

SCALE 1:50

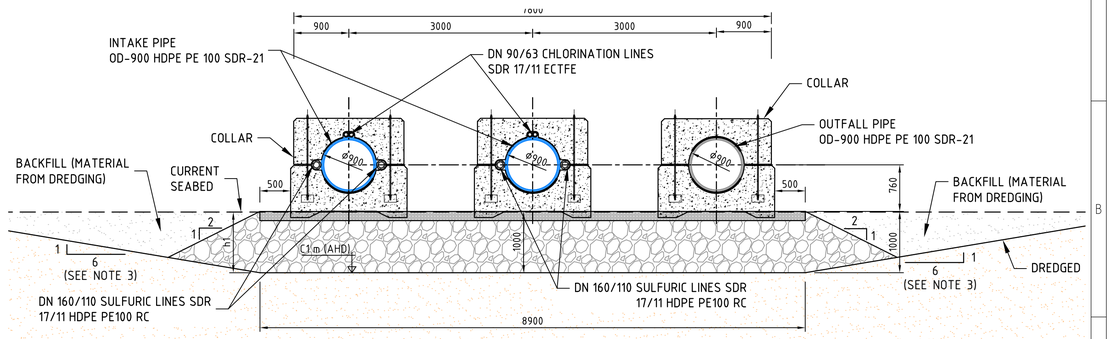

SECTION FOR 0+552.80. STRETCH 5: 0+552.80 TO 0+593.10

SCALE 1:50

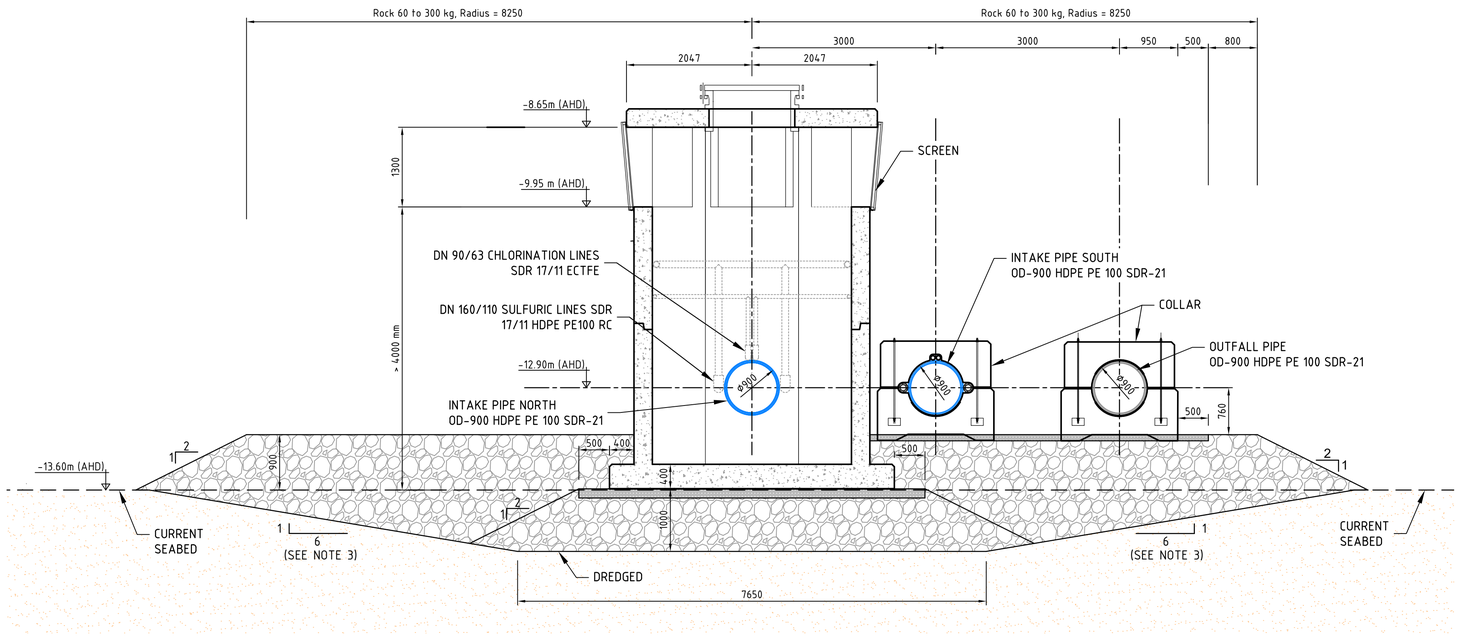

SECTION FOR PK 597 OF STRETCH 6 - 0+593.10 TO 600.75

SCALE 1:50

CONCRETE

SEDIMENT

BACKFILL SOIL / SOIL CLASS: SC-I MATERIAL ACORDING TO ASTM D-2487 CLASSIFICATION, THE MAXIMUM SIZE OF THE AGGREGATE IN THE VICINITY OF THE PIPES WILL BE 13 mm

GRAVEL BED, PARTICLE SIZE: 20 to 40 mm THICKNESS = 0.15 m

ROCK 60 TO 300 KG

NOTES

1. THE ALTIMETRIC SYSTEM IS IN METERS REFERENCED TO THE AUSTRALIAN HEIGHT DATUM.
2. THE DIMENSIONS ARE IN MILLIMETERS
3. THE DREDGING SLOPES WILL BE AJUSTED BASED ON THE GEOTHECNICAL STUDIES TO BE CONDUCTED
4. THESE DRAWINGS WILL HAVE TO BE REVIEWED IN ACCORDANCE WITH THE RESULTS OF THE ONGOING MARINE GEOTECHNICAL INVESTIGATION

NOT FOR CONSTRUCTION
PRELIMINARY DRAWING FOR INFORMATION ONLY

EPDP-200-AED-CIV-DRG-3002

ISSUED FOR DEVELOPMENT APPLICATION

0 0.02 0.04 0.08 0.12
1 : 2m (A1) - 1 : 4m (A3)

REVISION PANEL

REV	DATE	DRN	DETAILS	APR'D
UR	17.05.24		UNDER REVIEW	

CURRENT REVISION CONTRACTOR:

CURRENT REV AUTHORISED

SIGNATURE

DESIGN PANEL

DESIGNED | AUTHORISED
DRAWN | SIGNATURE
REVIEWED
CONTRACTOR:

Government of South Australia
SA Water

This drawing is the property of the SOUTH AUSTRALIAN WATER CORPORATION and shall not be copied or modified in part or in whole without authorization.

EYRE PENINSULA DESALINATION PLANT
MARINE INTAKE PIPELINES AND INTAKE STRUCTURE
CIVIL
INTAKE PIPELINE
TYPE SECTIONS AND DETAILS

A1 SHT SIZE | MAXIMO ID: | PROJECT No: | UR REVISION
TOTAL SHEETS: | DISCIPLINE:
SUPERSEDES:
DRAWING NUMBER
YEAR NUMBER SHEET

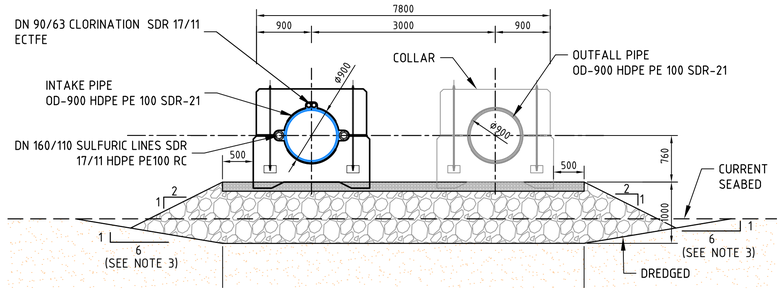

SECTION FOR 0+600.75. STRETCH 7: 0+600.75 TO 0+657.10

SCALE 1:50

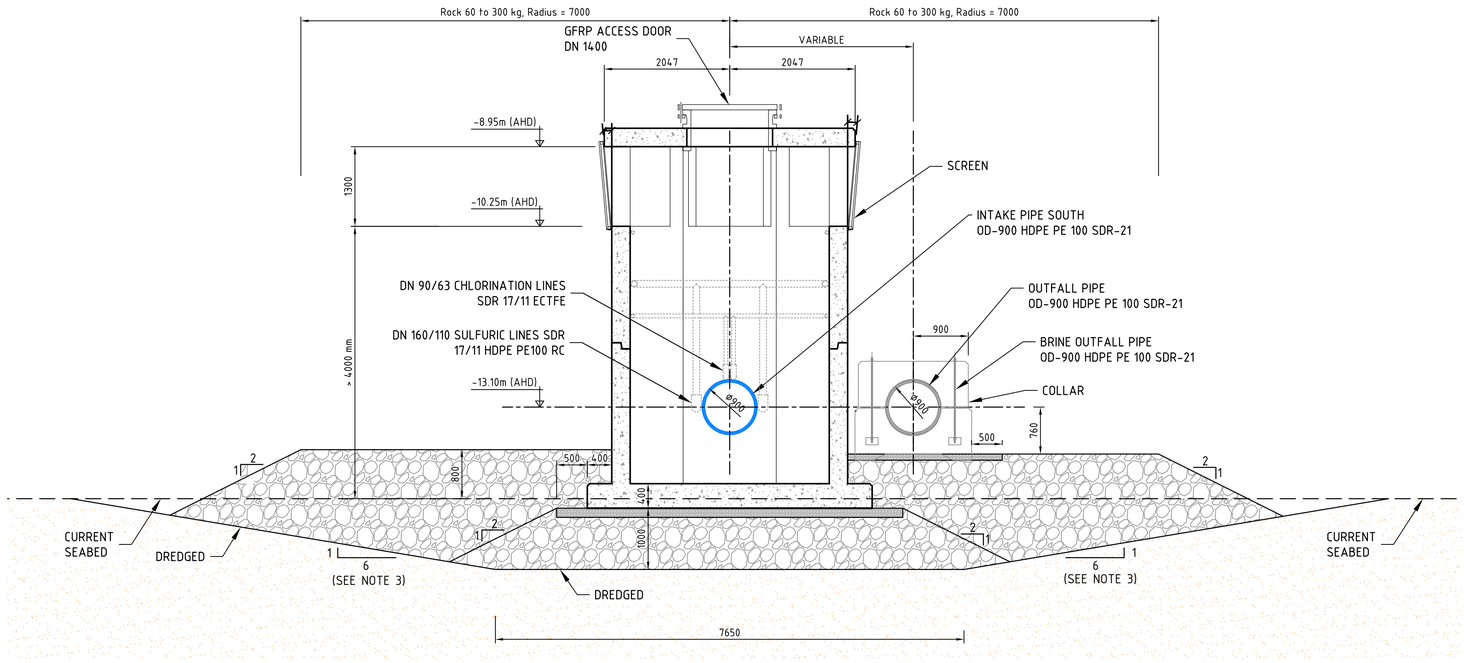

SECTION FOR PK 661 OF STRETCH 8 - 0+657.1 TO 664.75

SCALE 1:50

CONCRETE

SEDIMENT

BACKFILL SOIL / SOIL CLASS: SC-I MATERIAL ACORDING TO ASTM D-2487 CLASSIFICATION, THE MAXIMUM SIZE OF THE AGGREGATE IN THE VICINITY OF THE PIPES WILL BE 13 mm

GRAVEL BED, PARTICLE SIZE: 20 to 40 mm
THICKNESS = 0.15 m

ROCK 60 TO 300 KG

NOTES

1. THE ALTIMETRIC SYSTEM IS IN METERS REFERENCED TO THE AUSTRALIAN HEIGHT DATUM.
2. THE DIMENSIONS ARE IN MILLIMETERS
3. THE DREDGING SLOPES WILL BE AJUSTED BASED ON THE GEOTHECNICAL STUDIES TO BE CONDUCTED
4. THESE DRAWINGS WILL HAVE TO BE REVIEWED IN ACCORDANCE WITH THE RESULTS OF THE ONGOING MARINE GEOTECHNICAL INVESTIGATION

NOT FOR CONSTRUCTION
PRELIMINARY DRAWING FOR INFORMATION ONLY

EPDP-200-AED-CIV-DRG-3003

ISSUED FOR DEVELOPMENT APPLICATION

0 0.02 0.04 0.08 0.12
1 : 2m (A1) - 1 : 4m (A3)

REVISION PANEL

REV	DATE	DRN	DETAILS	APR'D
UR	17.05.24		UNDER REVIEW	

CURRENT REVISION CONTRACTOR:

CURRENT REV AUTHORISED

SIGNATURE

DESIGN PANEL

DESIGNED | AUTHORISED
DRAWN | SIGNATURE
REVIEWED
CONTRACTOR:

Government of South Australia
SA Water

This drawing is the property of the SOUTH AUSTRALIAN WATER CORPORATION and shall not be copied or modified in part or in whole without authorization.

EYRE PENINSULA DESALINATION PLANT
MARINE INTAKE PIPELINES AND INTAKE STRUCTURE
CIVIL
INTAKE PIPELINE
TYPE SECTIONS AND DETAILS

A1 SHT SIZE | MAXIMO ID: | PROJECT No: | UR REVISION
TOTAL SHEETS: | DISCIPLINE:
SUPERSEDES:
DRAWING NUMBER
YEAR NUMBER SHEET

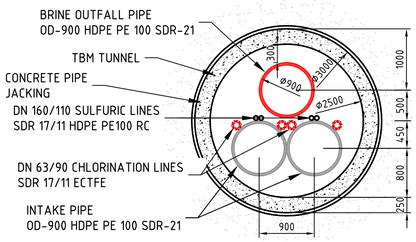

STRETCH 1 - 0+000 TO 489.75 M

SCALE 1:50

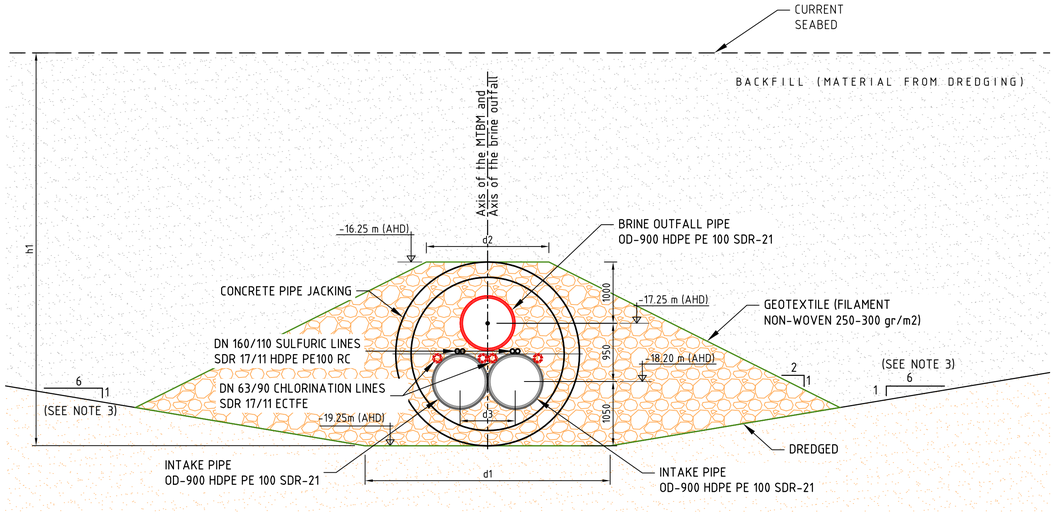

SECTION FOR 0+489. STRETCH 2: 0+489.75 TO 0+509.17

SCALE 1:50

PK	h1 (mm)	d1 (mm)	d2 (mm)	d3 (mm)	d4 (*) (mm)
0+489.75	9110 (**)	4000	2000	950	0
0+509.17	8000 (**)	8900	6000	3000	3670 (*)

Notes:
(**) Approximate value. Refer to the drawings:
- Intake Pipeline - Plan & Longitudinal Section
- Outfall Pipeline - Plan & Longitudinal Section

(*) See: Stretch 3

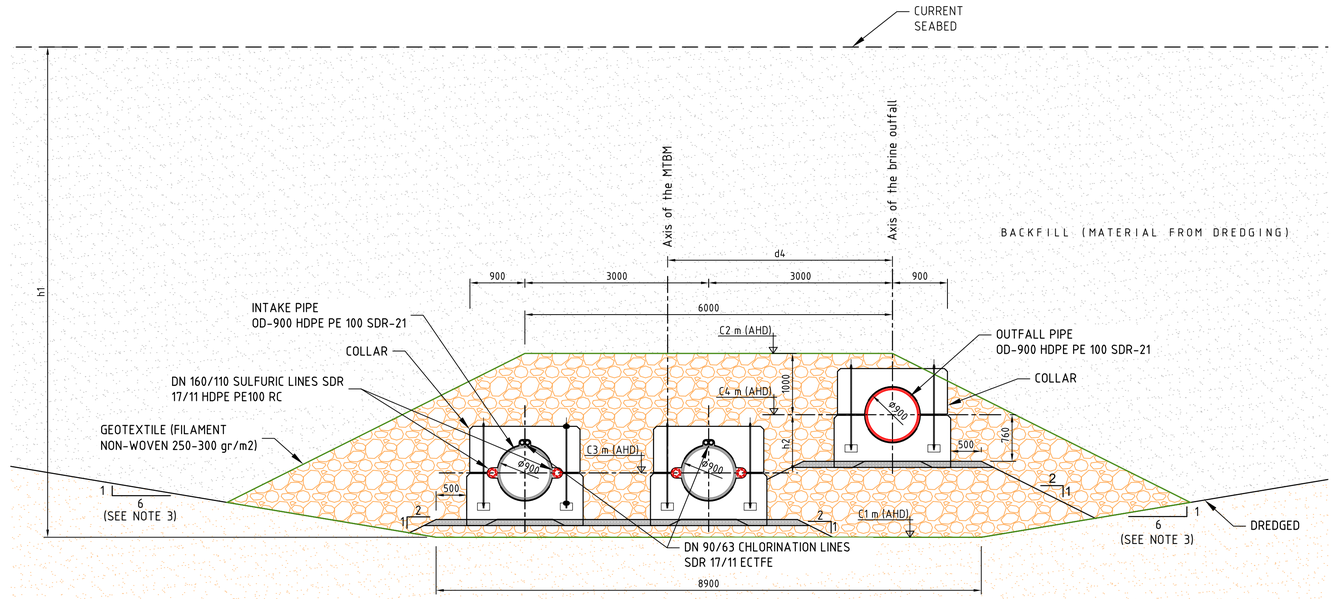

SECTION FOR 0+509. STRETCH 3: 0+509.17 TO 532.75 (A)

SCALE 1:50

PK	C1 m AHD	C2 m AHD	C3 m AHD	C4 m AHD	h1 (mm)	h2 (mm)	d4 (*) (mm)
0+509.17	-19.25	-16.25	-18.20	-17.25	8000 (**)	950	3670
0+532.75	-15.58	-12.07	-13.07	-13.07	3112 (**)	0	3670

Notes:
(**) Approximate value. Refer to the drawings:
- Intake Pipeline - Plan & Longitudinal Section
- Outfall Pipeline - Plan & Longitudinal Section

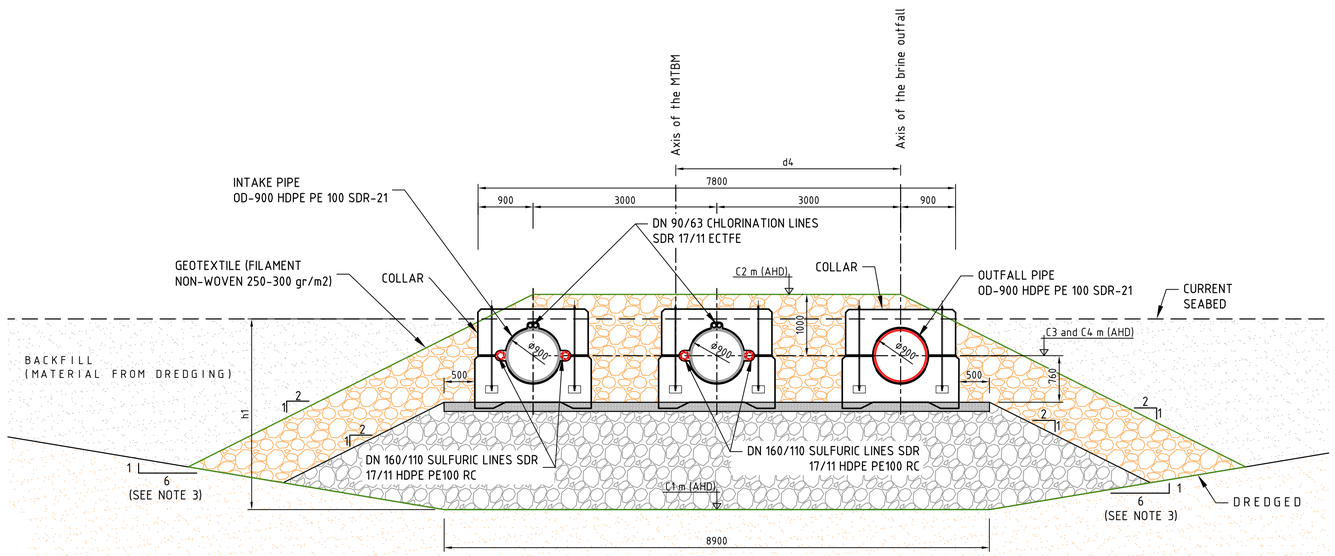

SECTION FOR: 0+532.75 (A)

SCALE 1:50

ISSUED FOR DEVELOPMENT APPLICATION

CONCRETE

SEDIMENT

BACKFILL SOIL / SOIL CLASS: SC-I MATERIAL ACORDING TO ASTM D-2487 CLASSIFICATION, THE MAXIMUM SIZE OF THE AGGREGATE IN THE VICINITY OF THE PIPES WILL BE 13 mm

GRAVEL BED, PARTICLE SIZE: 20 to 40 mm THICKNESS = 0.15 m

ROCK 60 TO 300 KG

NOT FOR CONSTRUCTION
PRELIMINARY DRAWING FOR
INFORMATION ONLY

NOTES

1. THE ALTIMETRIC SYSTEM IS IN METERS REFERENCED TO THE AUSTRALIAN HEIGHT DATUM.
2. THE DIMENSIONS ARE IN MILLIMETERS
3. THE DREDGING SLOPES WILL BE AJUSTED BASED ON THE GEOTHECNICAL STUDIES TO BE CONDUCTED
4. THESE DRAWINGS WILL HAVE TO BE REVIEWED IN ACCORDANCE WITH THE RESULTS OF THE ONGOING GEOTECHNICAL INVESTIGATION

0 0.02 0.04 0.08 0.12
1 : 2m (A1) - 1 : 4m (A3)

REVISION PANEL

REV	DATE	DRN	DETAILS	APR'D
UR	17.05.24		UNDER REVIEW	

CURRENT REVISION CONTRACTOR:

CURRENT REV AUTHORISED

SIGNATURE

DESIGN PANEL

DESIGNED | AUTHORISED
DRAWN | SIGNATURE
REVIEWED
CONTRACTOR:

SA Water
Government of South Australia

This drawing is the property of the SOUTH AUSTRALIAN WATER CORPORATION and shall not be copied or modified in part or in whole without authorization.

EYRE PENINSULA DESALINATION PLANT
MARINE BRINE DISCHARGE PIPELINE AND OUTFALL STRUCTURE
CIVIL
OUTFALL PIPELINE
TYPE SECTIONS AND DETAILS

A1 SHT SIZE | MAXIMO ID: | PROJECT No: | UR REVISION
TOTAL SHEETS: | DISCIPLINE:
SUPERSEDES:
DRAWING NUMBER
YEAR NUMBER SHEET

EPDP-500-AED-CIV-DRG-1003

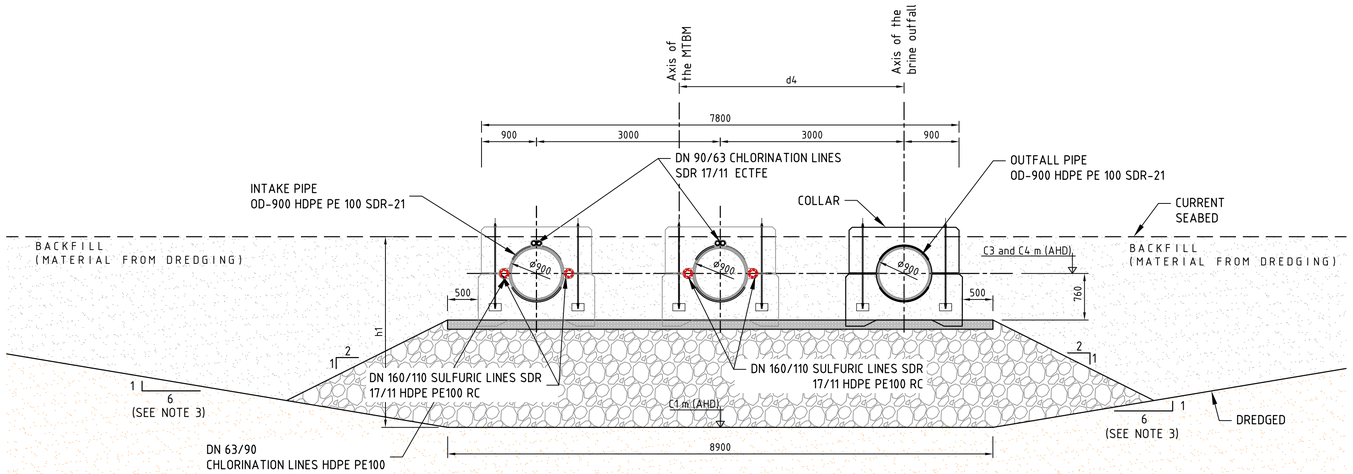

SECTION FOR 0+532.75 (4A'). STRETCH 4: 0+532.75 (A') TO 0+552.80

SCALE 1:50

PK	C1 m AHD	C3 m AHD	h1 (mm)
0+532.75	-15.58	-13.07	3112 (**)
0+552.80	-14.70	-12.92	991 (**)

Notes:
(**) Approximate value. Refer to the drawings:
- Intake Pipeline - Plan & Longitudinal Section
- Outfall Pipeline - Plan & Longitudinal Section

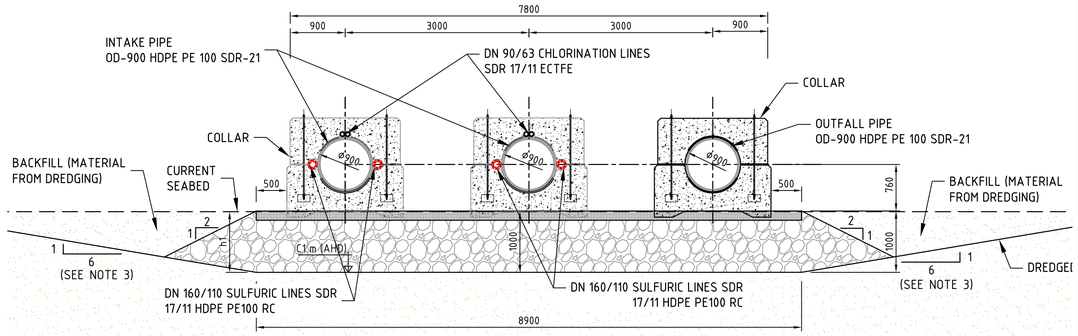

SECTION FOR 0+552.80. STRETCH 5: 0+552.80 TO 0+593.10

SCALE 1:50

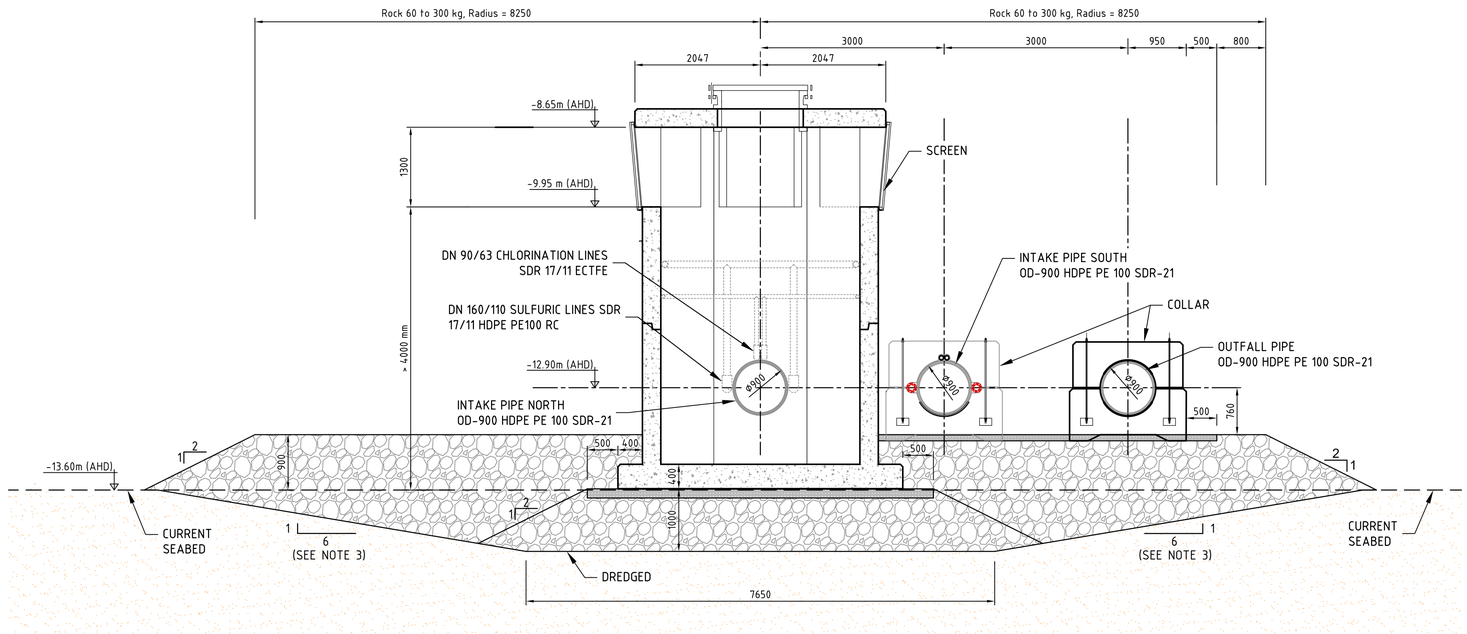

SECTION FOR PK 597 OF STRETCH 6 - 0+593.10 TO 600.75

SCALE 1:50

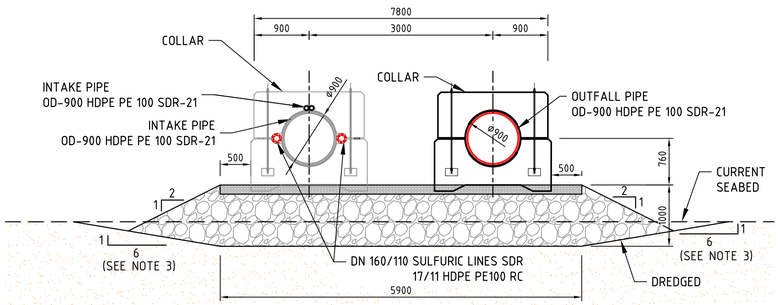

SECTION FOR 0+600.75. STRETCH 7: 0+600.75 TO 0+657.10

SCALE 1:50

CONCRETE

SEDIMENT

BACKFILL SOIL / SOIL CLASS: SC-I MATERIAL ACORDING TO ASTM D-2487 CLASSIFICATION, THE MAXIMUM SIZE OF THE AGGREGATE IN THE VICINITY OF THE PIPES WILL BE 13 mm

GRAVEL BED, PARTICLE SIZE: 20 to 40 mm THICKNESS = 0.15 m

ROCK 60 TO 300 KG

NOT FOR CONSTRUCTION
PRELIMINARY DRAWING FOR INFORMATION ONLY

NOTES

1. THE ALTIMETRIC SYSTEM IS IN METERS REFERENCED TO THE AUSTRALIAN HEIGHT DATUM.
2. THE DIMENSIONS ARE IN MILLIMETERS
3. THE DREDGING SLOPES WILL BE AJUSTED BASED ON THE GEOTHECNICAL STUDIES TO BE CONDUCTED
4. THESE DRAWINGS WILL HAVE TO BE REVIEWED IN ACCORDANCE WITH THE RESULTS OF THE ONGOING GEOTECHNICAL INVESTIGATION

ISSUED FOR DEVELOPMENT APPLICATION

EPDP-500-AED-CIV-DRG-1004

0 0.02 0.04 0.08 0.12
1 : 2m (A1) - 1 : 4m (A3)

REVISION PANEL

REV	DATE	DRN	DETAILS	APR'D
UR	17.05.24		UNDER REVIEW	

CURRENT REVISION CONTRACTOR:

CURRENT REV AUTHORISED

SIGNATURE

DESIGN PANEL

DESIGNED | AUTHORISED
DRAWN | SIGNATURE
REVIEWED
CONTRACTOR:

Government of South Australia
SA Water

This drawing is the property of the SOUTH AUSTRALIAN WATER CORPORATION and shall not be copied or modified in part or in whole without authorization.

EYRE PENINSULA DESALINATION PLANT
MARINE BRINE DISCHARGE PIPELINE AND OUTFALL STRUCTURE
CIVIL
OUTFALL PIPELINE
TYPE SECTIONS AND DETAILS

A1 SHT SIZE | MAXIMO ID: | PROJECT No: | UR REVISION
TOTAL SHEETS: | DISCIPLINE:
SUPERSEDES:
DRAWING NUMBER
YEAR NUMBER SHEET

TOWERS LEVELES	NORTH#1	SOUTH#2
TOP SLAB	-9.01	-9.55
TOC	-10.61	-11.15
INLET PIPE LEVEL	-12.66	-13.22
BOC	-14.31	-14.85

THE ALTIMETRIC SYSTEM IS IN METERS REFERENCED TO THE AUSTRALIAN HEIGHT DATUM (AHD)

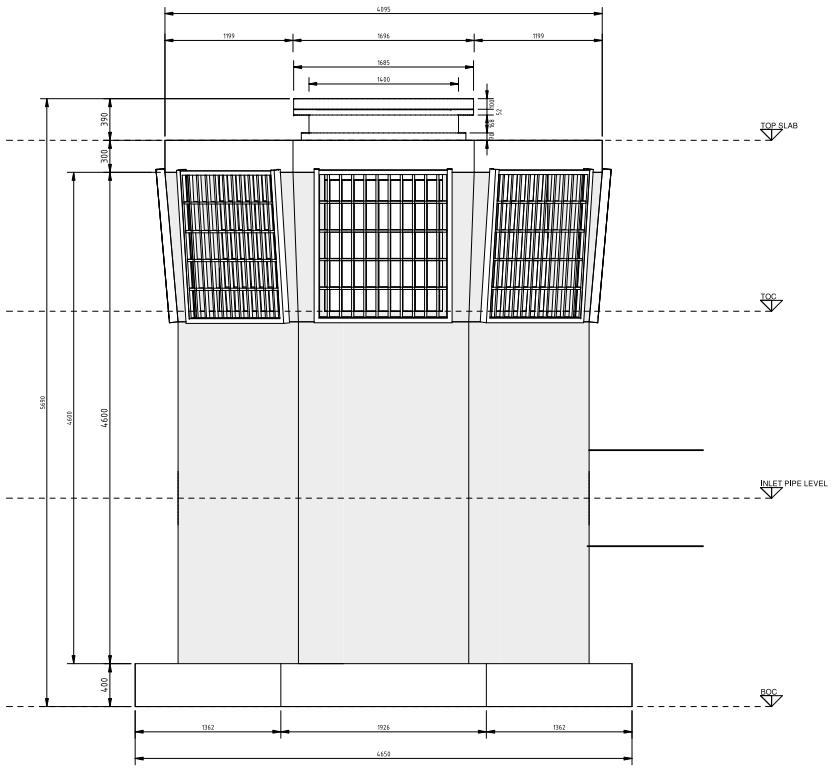

ELEVATION 1
SCALE 1 : 25

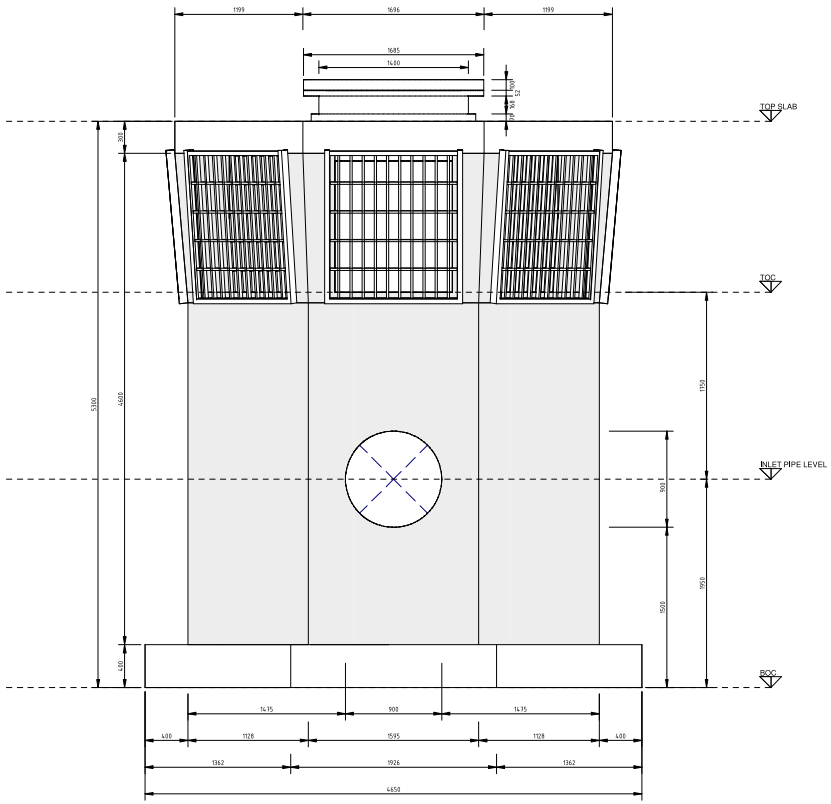

ELEVATION 2
SCALE 1 : 25

NOT FOR CONSTRUCTION
PRELIMINARY DRAWING FOR INFORMATION ONLY

0 500 1000 1500 2000 2500mm
1:25

NOTE: DIMENSIONS ARE IN MILLIMETERS

REVISION PANEL					
REV	DATE	DRN	DETAILS	APR'D	CURRENT REV AUTHORISED
UR	17.05.24		UNDER REVIEW		SIGNATURE
CURRENT REVISION CONTRACTOR:					

DESIGN PANEL	
DESIGNED	AUTHORISED
DRAWN	SIGNATURE
REVIEWED	
CONTRACTOR:	

SA Water

This drawing is the property of the © SOUTH AUSTRALIAN WATER CORPORATION and shall not be copied or modified in part or in whole without authorization.

ISSUED FOR DEVELOPMENT APPLICATION

EYRE PENINSULA DESALINATION PLANT
MARINE INTAKE PIPELINES AND INTAKE STRUCTURE
STRUCTURAL
INTAKE TOWERS - ELEVATIONS

EPDP-200-AED-CIV-DRG-4003

A1 SHT SIZE | TOTAL SHEETS: x | PROJECT No: xxx | XX REVISION

MAXIMO ID:

SUPERSEDES:

DRAWING NUMBER

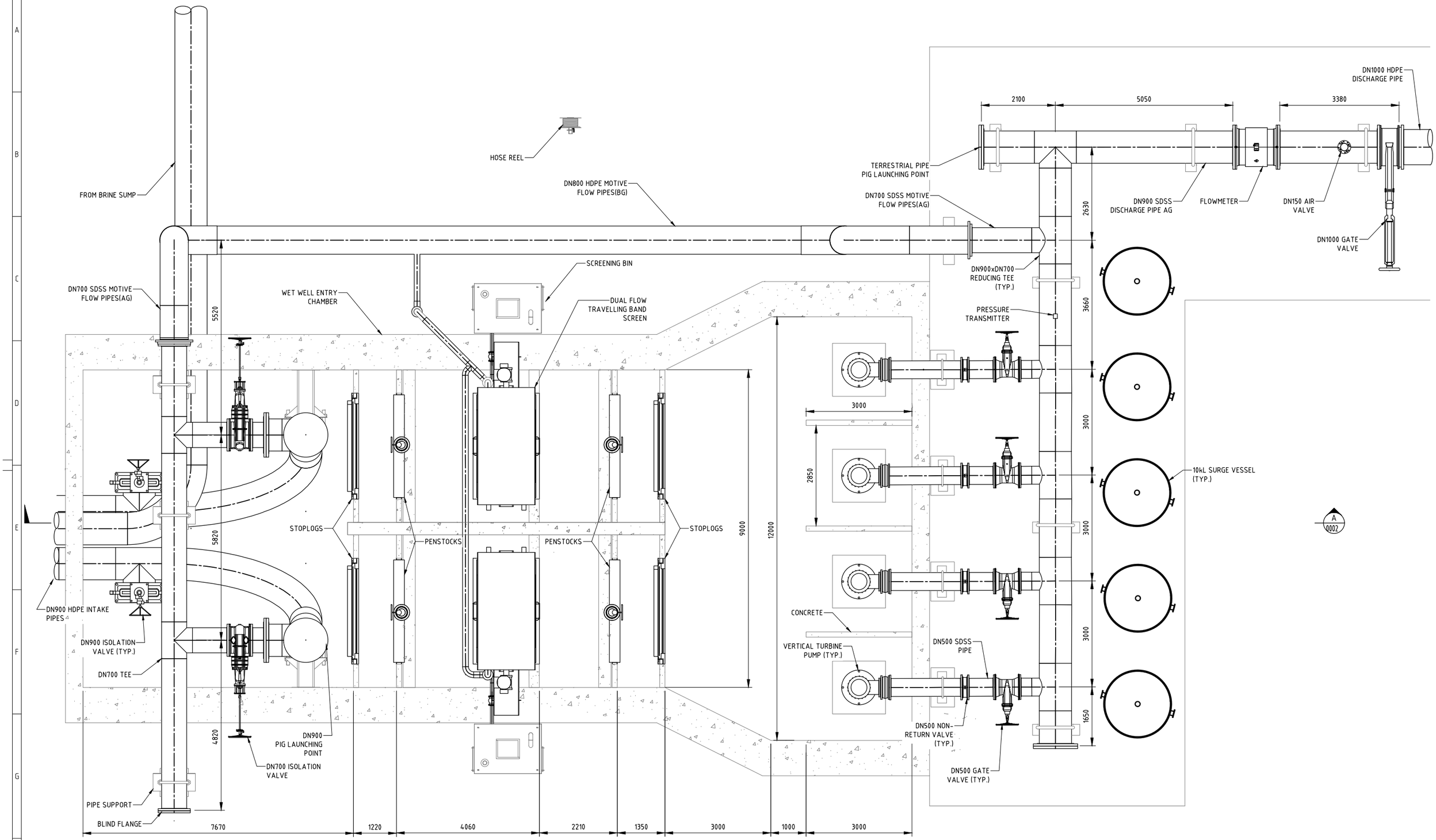

MARINE INTAKE PUMP STATION PLAN

SCALE 1: 50

0 500 1000 1500 2000 2500mm

SCALE 1:50 AT ORIGINAL SIZE

ISSUED FOR DEVELOPMENT APPLICATION

NOT FOR CONSTRUCTION
PRELIMINARY DRAWING FOR INFORMATION ONLY

REVISION PANEL

REV	DATE	DRN	DETAILS	APR'D
UR2	28.05.24		UNDER REVISION	
UR1	28.03.24		UNDER REVISION	

CURRENT REVISION CONTRACTOR:

CURRENT REV AUTHORISED

SIGNATURE

DESIGN PANEL

DESIGNED	AUTHORISED
DRAWN	SIGNATURE
REVIEWED	
CONTRACTOR:	

Government of South Australia

SA Water

This drawing is the property of the SOUTH AUSTRALIAN WATER CORPORATION and shall not be copied or modified in part or in whole without authorization.

EYRE PENINSULA DESALINATION PLANT
EX BHP - BILLY LIGHTS POINT
MECHANICAL
MARINE INTAKE PUMP STATION
PLAN

PROJECT DRAWING NUMBER
EPDP-300-SMC-MEC-DRG-0001

A1 SHT SIZE | MAXIMO ID: P041916 | PROJECT No: A0012-0025 | UR2 REVISION

TOTAL SHEETS: | DISCIPLINE:

SUPERSEDES:

DRAWING NUMBER
P041916-02-00001 01
YEAR NUMBER SHEET

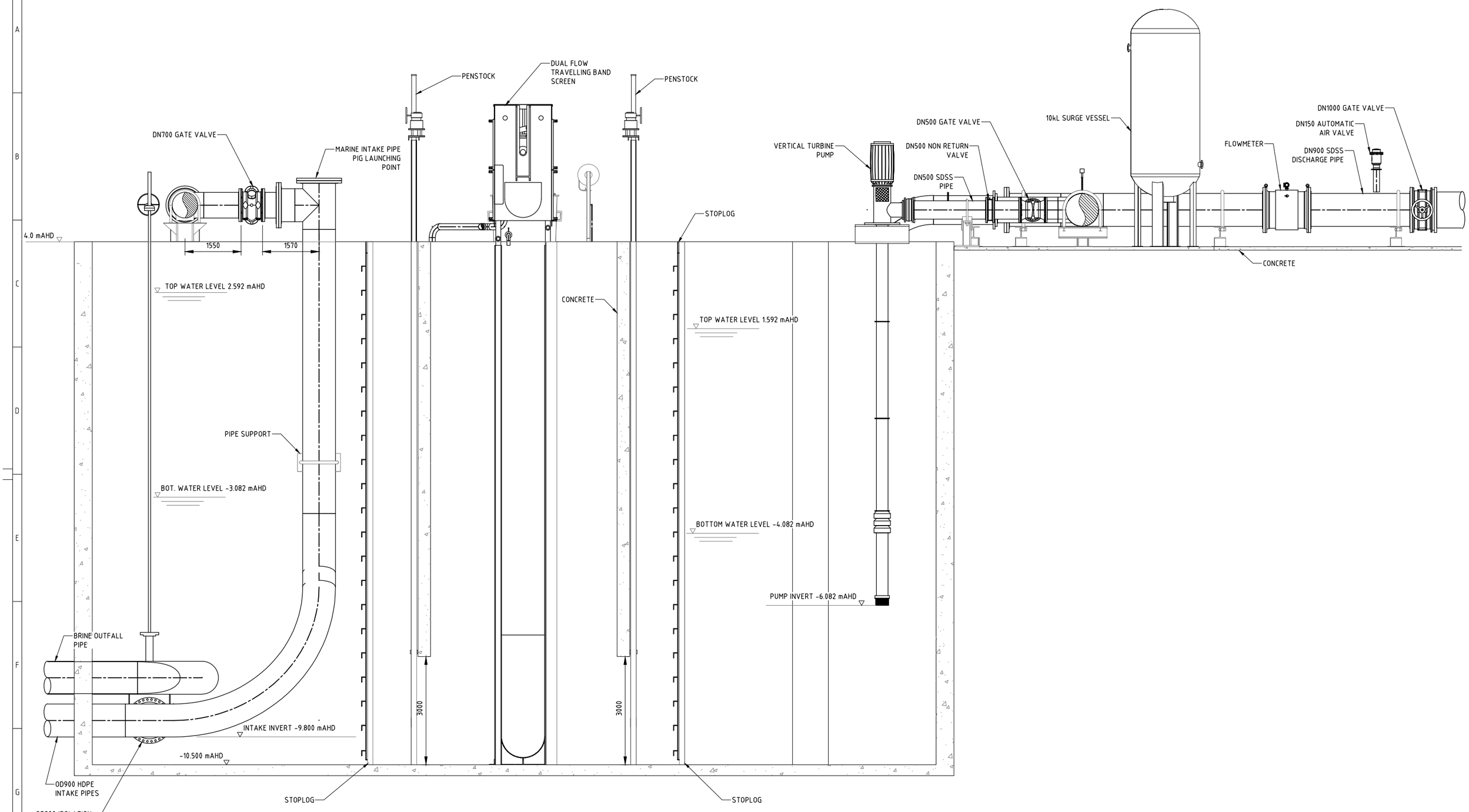

SECTION A 0001
SCALE 1: 50

0 500 1000 1500 2000 2500mm
SCALE 1:50 AT ORIGINAL SIZE

ISSUED FOR DEVELOPMENT APPLICATION

NOT FOR CONSTRUCTION
PRELIMINARY DRAWING FOR INFORMATION ONLY

REVISION PANEL

REV	DATE	DRN	DETAILS	APR'D
UR2	28.05.24		UNDER REVISION	
UR1	28.03.24		UNDER REVISION	

CURRENT REVISION CONTRACTOR:

CURRENT REV AUTHORISED
SIGNATURE

DESIGN PANEL

DESIGNED	AUTHORISED
DRAWN	SIGNATURE
REVIEWED	
CONTRACTOR:	

Government of South Australia
SA Water

This drawing is the property of the SOUTH AUSTRALIAN WATER CORPORATION and shall not be copied or modified in part or in whole without authorization.

EYRE PENINSULA DESALINATION PLANT
EX BHP - BILLY LIGHTS POINT
MECHANICAL
MARINE INTAKE PUMP STATION
SECTION

PROJECT DRAWING NUMBER
EPDP-300-SMC-MEC-DRG-0002

A1 SHT SIZE
MAXIMO ID: P041916
PROJECT No: A0012-0025
UR2 REVISION
TOTAL SHEETS:
DISCIPLINE:
SUPERSEDES:
DRAWING NUMBER
P041916-02-00002 01
YEAR NUMBER SHEET

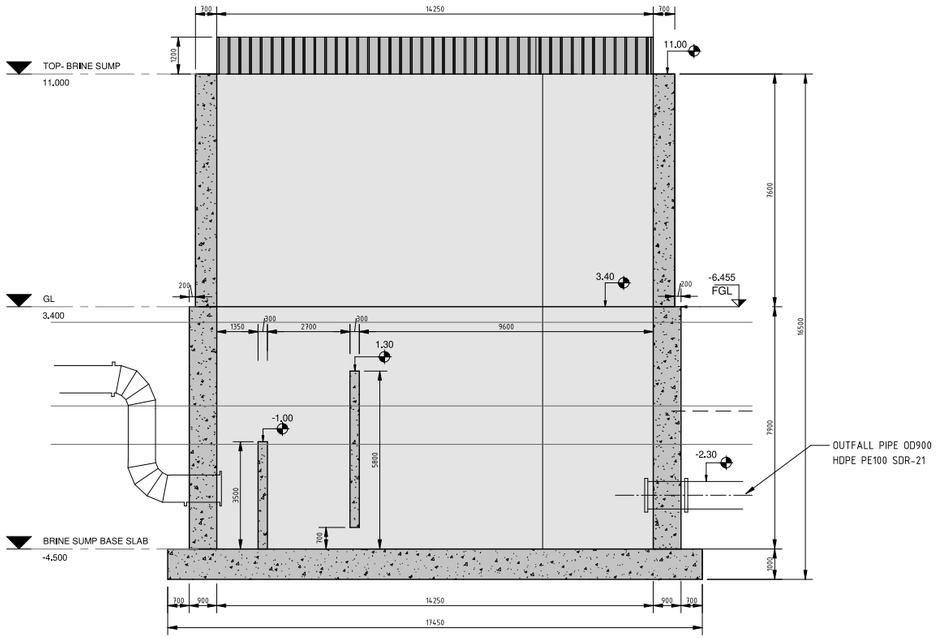

SECTION 1
SCALE 1 : 100

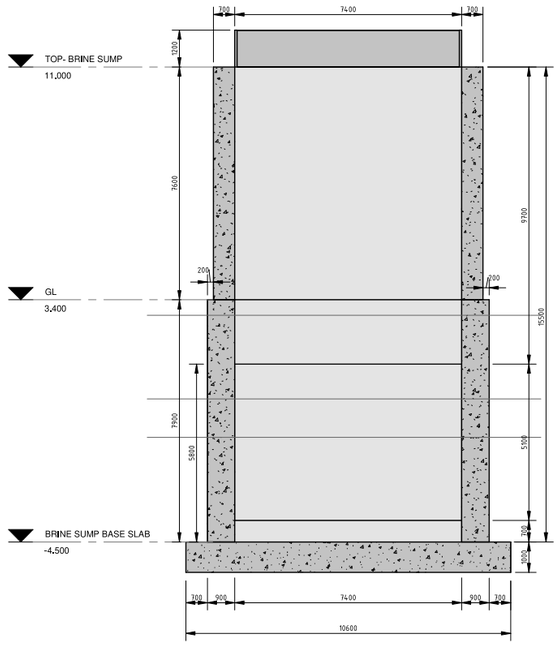

SECTION 2
SCALE 1 : 100

NOTE:
THE ALTIMETRIC SYSTEM IS IN METERS REFERENCED TO THE AUSTRALIAN HEIGHT DATUM (AHD)

BRINE SUMP STRUCTURE		
Description	Thickness	Kg/m3
Top Wall	700	180
Bottom Wall	900	180
Foundation Slab	1000	180

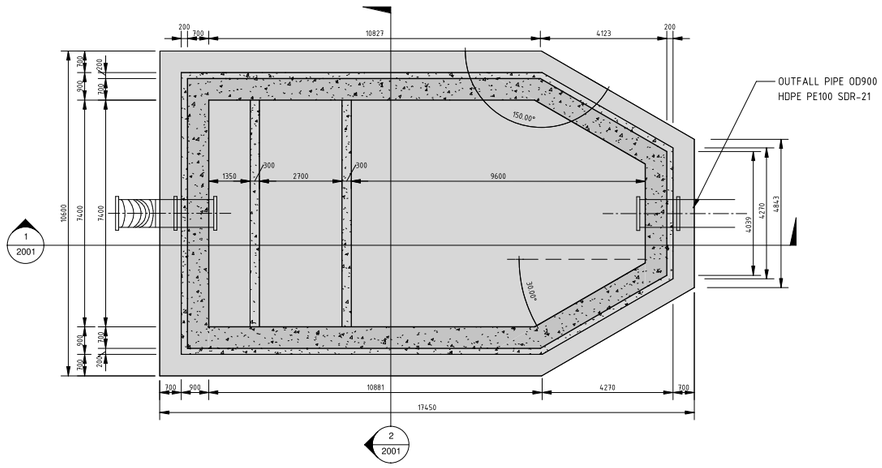

BRINE SUMP CONCRETE PLAN
SCALE 1 : 100

NOT FOR CONSTRUCTION
PRELIMINARY DRAWING FOR
INFORMATION ONLY

0 2000 4000 6000 8000 10000mm
1:100

ISSUED FOR DEVELOPMENT APPLICATION

EPDP-300-AED-CIV-DRG-2001

REVISION PANEL					
REV	DATE	DRN	DETAILS	APR'D	CURRENT REV AUTHORISED
					SIGNATURE
UR	17.05.24		UNDER REVIEW		
CURRENT REVISION CONTRACTOR:					

DESIGN PANEL	
DESIGNED	AUTHORISED
DRAWN	SIGNATURE
REVIEWED	
CONTRACTOR:	

SA Water

This drawing is the property of the © SOUTH AUSTRALIAN WATER CORPORATION and shall not be copied or modified in part or in whole without authorization.

EYRE PENINSULA DESALINATION PLANT
MARINE INTAKE PUMP STATION AND INLAND INTAKE PIPELINE
STRUCTURAL
BRINE SUMP - CONCRETE PLAN, SECTIONS AND ELEVATIONS

A1 SHT SIZE | TOTAL SHEETS: X | PROJECT No: | 0.1A REVISION

MAXIMO ID:

SUPERSEDES:

DRAWING NUMBER

PORT LINCOLN DESALINATION PLANT
POTABLE WATER TRANSFER MAIN
GREYHOUND RD. - PROPER BAY RD. - BLUE FIN RD. PORT. LINCOLN

LOCALITY KEY PLAN

SCALE 1:10,000

DRAWING INDEX

Sheet Number	Sheet Title
P041992-05-00001_01	LOCALITY PLAN AND DRAWING INDEX
P041992-05-00001_02	GENERAL NOTES
P041992-05-00002_01	PLAN & LONGITUDINAL PROFILE CHN0 - 270
P041992-05-00002_02	PLAN & LONGITUDINAL PROFILE CHN270 - 540
P041992-05-00002_03	PLAN & LONGITUDINAL PROFILE CHN540 - 810
P041992-05-00002_04	PLAN & LONGITUDINAL PROFILE CHN810 -1080
P041992-05-00002_05	PLAN & LONGITUDINAL PROFILE CHN1080 - 1350
P041992-05-00002_06	PLAN & LONGITUDINAL PROFILE CHN1350 - 1620
P041992-05-00002_07	PLAN & LONGITUDINAL PROFILE CHN1620 - 1890
P041992-05-00002_08	PLAN & LONGITUDINAL PROFILE CHN1890 - 2160
P041992-05-00002_09	PLAN & LONGITUDINAL PROFILE CHN2160 - 2430
P041992-05-00002_10	PLAN & LONGITUDINAL PROFILE CHN2430 - 2700
P041992-05-00002_11	PLAN & LONGITUDINAL PROFILE CHN2700 - 2970
P041992-05-00002_12	PLAN & LONGITUDINAL PROFILE CHN2970 - 3240
P041992-05-00002_13	PLAN & LONGITUDINAL PROFILE CHN3240 - 3510
P041992-05-00002_14	PLAN & LONGITUDINAL PROFILE CHN3510 - 3780
P041992-05-00002_15	PLAN & LONGITUDINAL PROFILE CHN3780 - 4050
P041992-05-00002_16	PLAN & LONGITUDINAL PROFILE CHN4050 - 4320
P041992-05-00002_17	PLAN & LONGITUDINAL PROFILE CHN4320 - 4590
P041992-05-00002_18	PLAN & LONGITUDINAL PROFILE CHN4590 - 4860
P041992-05-00002_19	PLAN & LONGITUDINAL PROFILE CHN4860 - 5130
P041992-05-00002_20	PLAN & LONGITUDINAL PROFILE CHN5130 - 5400
P041992-05-00002_21	PLAN & LONGITUDINAL PROFILE CHN5400 - 5670
P041992-05-00002_22	PLAN & LONGITUDINAL PROFILE CHN5670 - 5940
P041992-05-00002_23	PLAN & LONGITUDINAL PROFILE CHN5940 - 6210
P041992-05-00002_24	PLAN & LONGITUDINAL PROFILE CHN6210 - 6480
P041992-05-00002_25	PLAN & LONGITUDINAL PROFILE CHN6480 - 6750
P041992-05-00002_26	PLAN & LONGITUDINAL PROFILE CHN6750 - 7020
P041992-05-00002_27	PLAN & LONGITUDINAL PROFILE CHN7020 - END
P041992-05-00003_01	TRENCH DETAILS
P041992-05-00003_02	THRUST BLOCK DETAILS
P041992-05-00003_03	ANCHOR BLOCK DETAILS
P041992-05-00003_04	ISOLATION VALVE DETAILS
P041992-05-00003_05	SCOUR PIT DETAILS
P041992-05-00003_06	MSCL PIPE BEND DETAILS
P041992-05-00003_07	TRENCHLESS CROSSING DETAIL
P041992-05-00003_08	BRANCH TEE DETAIL
P041992-05-00003_09	SCOUR OFFTAKE DETAIL
P041992-05-00003_10	THRUST COLLAR DETAILS
P041992-05-00003_11	CATHODIC PROTECTION

BEFORE YOU DIG
www.byda.com.au

WARNING
BEWARE OF OVERHEAD AND UNDERGROUND SERVICES

THE LOCATION OF OVERHEAD AND UNDERGROUND SERVICES ARE APPROXIMATE ONLY AND THEIR EXACT POSITION SHOULD BE PROVEN ON SITE
NO GUARANTEE IS GIVEN THAT ALL SERVICES ARE SHOWN
REFER TO ASSET OWNER FOR THEIR CLEARANCE AND APPROACH REQUIREMENTS

THIS DRAWING IS TO BE VIEWED IN COLOUR AS SOME FEATURES / SYMBOLS ARE DIFFERENTIATED BY COLOUR. DRAWING NOT TO BE RELIED ON IF PRINTED IN GREYSCALE.

FOR INFORMATION
NOT TO BE USED FOR CONSTRUCTION

0 100 200 400 600
1 : 10,000m (A1) - 1 : 20,000m (A3)

REVISION PANEL

REV	DATE	DRN	DETAILS	APR'D
0.1B	13.10.23	CSS	60% DESIGN	SW
0.1A	08.09.23	CSS	60% DRAFT DESIGN FOR REVIEW	SW

CURRENT REV CONTRACTOR: TONKIN / WSP
CURRENT REV PROJECT: 220258

CURRENT REV AUTHORISED 13.10.23
J.TYLER
SIGNATURE

DESIGN PANEL

DESIGNED 13.10.23 L.HAYSMAN
DRAWN 13.10.23 C.SUTCLIFFE
REVIEWED 13.10.23 S.WHICHELO
AUTHORISED 13.10.23 J.TYLER
SIGNATURE
CONTRACTOR: TONKIN / WSP

Government of South Australia
SA Water

This drawing is the property of the SOUTH AUSTRALIAN WATER CORPORATION and shall not be copied or modified in part or in whole without authorization.

EYRE PENINSULA DESALINATION PLANT

TREATED WATER TRANSFER PIPELINE
NETWORK & RETICULATION
LOCALITY PLAN AND DRAWING INDEX

A1 SHT SIZE
TOTAL SHEETS: 2
PROJECT No: A0012-0025
0.1B REVISION
MAXIMO ID: P041992
SUPERSEDES:
DRAWING NUMBER
P041992-05-00001_01

NOTES:

PIPEWORK

P1. ALL DIMENSIONS IN METRES UNLESS NOTED OTHERWISE.

P2. PROPOSED TRANSFER MAIN IS OD648 x 6WT MSCL WITH RUBBER RING JOINTS. REFER A0012-0025-C-MEC-DAS-10402 FOR PIPE DATASHEET.

P3. DRAWINGS TO BE READ IN CONJUNCTION WITH TECHNICAL SPECIFICATION OF THE CONTRACT DOCUMENTATION AND SA WATER'S WATER SUPPLY CONSTRUCTION MANUAL (WSCM).

P4. SURVEY DATUMS:

GRID DATUM - GIS COORDINATE SYSTEM GDA2020, MGA ZONE 53.

P5. ANY FITTINGS, VALVES OR FIRE PLUGS LOCATED ON MAINS SHOWN AS TO BE ABANDONED REMAIN THE PROPERTY OF SA WATER & SHALL BE REMOVED & RETURNED TO THE SA WATER DEPOT AT PORT LINCOLN.

P6. DRAWING BEND ANGLES NOTED IN REMARKS LINE ARE FOR HORIZONTAL PLANE ONLY.

P7. THE FINAL ALIGNMENT AND GRADING OF THE PIPELINE SHALL BE CONFIRMED ON SITE. ALL CHANGES TO THE DESIGN GRADING AN ALIGNMENT TO BE SUBMITTED TO THE SUPERINTENDENT FOR APPROVAL PRIOR TO LAYING.

P8. THE ALIGNMENT SHALL BE PEGGED IN ADVANCE OF PIPE LAYING. TIE TO FENCES, BUILDINGS, EDGE OF KERBS ETC. SHALL BE USED FOR INFORMATION ONLY.

P9. AS CONSTRUCTED INFORMATION SHALL BE RECORDED IN MGA2020 COORDINATES IN ACCORDANCE WITH TS0100.

P10. PROVIDE STRIP(S) OF DETECTABLE MARKER TAPE ALONG PIPELINE AS SPECIFIED.

P11. ALL FLANGES SHALL BE TO AS 4087 PN35 U.N.O. AND WRAPPED WITH PETROLATUM TAPE IN ACCORDANCE WITH TS 18.

P12. CONCRETE FOR THRUST/ANCHOR BLOCKS SHALL BE POURED AGAINST UNDISTURBED GROUND.

P13. THE CONTRACTOR SHALL GIVE THE SUPERINTENDENT'S REPRESENTATIVE A MINIMUM OF FIVE WORKING DAYS NOTICE OF THEIR INTENTION TO PERFORM A HYDRAULIC TEST ON A SECTION OF PIPE. HYDROSTATIC PRESSURE TESTING SHALL BE IN ACCORDANCE WITH TS0210. TEST PRESSURE SHALL BE 2500 kPa AT THE LOWEST POINT OF THE SECTION OF PIPE TO BE TESTED.

P14. ALL PIPE, FITTINGS AND VALVES SHALL BE IN ACCORDANCE WITH THE SPECIFICATION.

P15. ALL GASKETS SHALL BE IN ACCORDANCE WITH AS4087 AND ISOLATION SHALL BE PROVIDED BETWEEN DISSIMILAR METALS USING NON-CONDUCTIVE MATERIALS.

P16. INDICATOR POSTS AND SIGNS SHALL BE USED AT ALL ISOLATION VALVES, SCOURS AND AIR VALVES IN ACCORDANCE WITH SA WATER WSCM SECTION 7.

P17. ALL BURIED FITTINGS SHALL BE WRAPPED IN POLYETHYLENE SLEEVING. REFER TO TS0503.

P18. PIPE FLANGE WELDS SIZE TO BE EQUAL TO RELEVANT PIPE WALL THICKNESS.

P19. FIRE PLUGS SHALL BE INSTALLED IN ACCORDANCE WITH WSCM SECTION 7 AND THE DRAWINGS. ALL FIRE PLUG SHALL HAVE 2-PIECE LIDS INSTALLED.

P20. HYDRANT AND SCOUR VALVES SHALL BE WITHIN 10m OF THE LOCATION SHOWN ON DRAWINGS.

P21. ALL PIPEWORK, FITTINGS AND VALVES SHALL BE IN ACCORDANCE WITH THE DATA SHEETS, THE PROJECT SPECIFICATION AND DRAWINGS UNLESS NOTED OTHERWISE. ALL MATERIALS IN CONTACT WITH DRINKING WATER SHALL BE COMPLIANT WITH AS4020/2018 AND SA WATER TS800.

P22. NEW MAINS SHALL BE CONSTRUCTED TO MAINTAIN MIN HORIZONTAL AND VERTICAL CLEARANCES TO OTHER SERVICES AND STRUCTURES IN ACCORDANCE WITH TS0136.

P23. THE CONTRACTOR SHALL INSTALL THRUST OR ANCHOR BLOCKS AT ALL UNRESTRAINED BENDS, VALVES, TAPERS AND BRANCHES IN ACCORDANCE WITH THE WSCM DRG 4005-30005-03 TO -07. CONCRETE USED FOR THRUST AND ANCHOR BLOCKS SHALL BE IN ACCORDANCE WITH THE SPECIFICATION AND TS0710.

P24. ALL NEW MAINS SHALL BE MINIMUM PN25 RATING.

P25. VALVE EXTENSION SPINDLE TO BE DESIGNED TO WITHSTAND MINIMUM STRENGTH TEST TORQUE REQUIREMENTS IN AS2638.1 & AS 2638.2 FOR GATE VALVES.

P26. UNLESS NOTED OTHERWISE, PIPES SHALL HAVE SINTAJOINT RUBBER RING JOINTS IN ACCORDANCE WITH THE MANUFACTURERS RECOMMENDATION. WHERE HORIZONTAL AND VERTICAL DEFLECTIONS EXCEED MAXIMUM, THE CONTRACTOR SHALL DEFLECT THE PIPE OVER SEVERAL JOINTS OR USE A FABRICATED BEND, AS REQUIRED.

P27. MSCL PIPE SHALL BE EXTERNALLY COATED WITH A FUSION BONDED MEDIUM DENSITY POLYETHYLENE (FBMDP) IN ACCORDANCE WITH AS4321 OR SIMILAR APPROVED. REINSTATEMENT OF EXTERNAL COATING SHALL BE IN ACCORDANCE WITH SA WATER TS18.

P28. MSCL PIPEWORK MATERIAL TESTING SHALL BE IN ACCORDANCE WITH THE SPECIFICATION AND AS1579. ALL WELDS SHALL BE SUBJECT TO NDT IN ACCORDANCE WITH THE SPECIFICATION AND TS0420.

P29. INTERNAL CEMENT MORTAR LINING SHALL BE FULLY REINSTATED AT ALL JOINTS IN ACCORDANCE WITH THE SPECIFICATION AND REQUIREMENTS OF AS1281 AND TS0465 FOR ALL PIPE SPOOL FITTINGS WHICH ARE EITHER SHOP MANUFACTURED OR FIELD ACCESSIBLE.

P30. WELDING OF MSCL PIPEWORK SHALL BE IN ACCORDANCE WITH THE DRAWINGS, AS1554 AND SA WATER TECHNICAL STANDARD TS0420.

P31. ALL MSCL PIPES SHALL BE GRADE 300 MINIMUM U.N.O.

P32. ALL PIPE BOLTS, NUTS AND WASHERS TO BE HDG IN ACCORDANCE WITH THE SPECIFICATION AND AS1214.

P33. EDGE PREPARATION AND WELDING OF MSCL PIPE SHALL BE IN ACCORDANCE WITH AS4041 CLASS 2P AND TS0420.

P34. MSCL PIPE SHALL BE INTERNALLY LINED WITH CEMENT MORTAR IN ACCORDANCE WITH AS1281.

P35. WHERE DISSIMILAR METALS COME INTO CONTACT THEY SHALL BE ELECTRICALLY ISOLATED FROM EACH OTHER USING INSULATING MATERIAL SUCH AS 3mm THICK DURABLE RUBBER, PLASTIC OR TEFLON GASKET OR SLEEVE, OR OTHER EQUIVALENT MATERIALS SUITABLE FOR THE APPLICATION.

GROUND CONDITIONS

GC1. GEOTECHNICAL SITE INVESTIGATIONS HAVE BEEN CONDUCTED ALONG THE PIPELINE ROUTE (REFER REPORT 'A0012-0025-GEO-REP-10002'). GROUND CONDITIONS ARE INDICATIVE AND HIGHLY VARIABLE.

GC2. ADVERSE CHANGES IN GROUND CONDITIONS OBSERVED DURING CONSTRUCTION SHALL BE REFERRED TO SA WATER FOR APPROPRIATE ASSESSMENT AND GEOTECHNICAL ADVICE.

GC3. THE GEOTECHNICAL CONDITIONS SHALL BE VERIFIED IN THE FIELD BY SUITABLY QUALIFIED PERSONNEL. WHERE ADVERSE GROUND CONDITIONS ARE OBSERVED, OR SOIL PROFILE IS NON-CONSISTENT WITH THE GEOTECHNICAL INVESTIGATION ADDITIONAL DESIGN ADVISE SHALL BE OBTAINED FROM A QUALIFIED GEOTECHNICAL ENGINEER AND THE DESIGNER.

GC4. THE EXCAVATION FOR EACH THRUST BLOCK AND ANCHOR BLOCK SHALL BE VERIFIED BY AN APPROPRIATELY EXPERIENCED AND QUALIFIED PRACTITIONER TO CONFIRM THE ALLOWABLE HORIZONTAL BEARING PRESSURE (AHBP) PRIOR TO CONCRETE POUR. THIS SHALL CONSTITUTE A HOLD POINT.

CATHODIC PROTECTION

CP1. REFER 'A0012-0025-C-CP-MEM-10405' FOR CATHODIC PROTECTION RECOMMENDATIONS, SA WATER TS0440, AND SA WATER STANDARD DRAWINGS STD-04-00001 SHEETS 02 AND 15 FOR ARRANGEMENT OF TEST POINTS (STREETBOXES AND TIMBER POST MOUNTED). REFER DETAIL P041992-05-00003_11 FOR ICCP ANODE WELLS, TO BE PROVIDED AT EACH TR LOCATION AS MARKED ON PLAN AND LONG SECTIONS.

CP2. ALL CABLES SHALL BE RUN IN CONDUIT WITH 50mm SAND ABOVE AND BELOW CONDUIT.

CP3. ALL GROUND BOXES SHALL BE LOCATED BEHIND THE ROADSIDE KERB OR IN A MEDIAN STRIP WHICH CAN BE SAFELY ACCESSED BY OPERATORS WHERE GROUND BOXES ARE NOT SUITABLE (DUE TO TRAFFIC/STAKEHOLDERS), TIMBER TEST POINTS SHALL BE PROVIDED IN ACCORDANCE WITH STD-04-00001_02.

CP4. SACRIFICIAL ANODE SHALL BE 9KG ZINC PRE-PACKAGED OR APPROVED EQUIVALENT, IN ACCORDANCE WITH SA WATER TS0440.

CP5. INSTALL AN INSULATION JOINT PROTECTION 'DAIRYLAND SSD DC DECOUPLER' IN THE GROUND BOXES OR ON TIMBER POSTS WHERE BOND CABLES FROM INSULATING JOINTS ARE LOCATED.

CP6. ALL CABLE PITS AND C.I. GROUND BOXES FOR BOND CABLES AND TEST POINTS SHALL BE LOCATED WHERE THEY CAN BE SAFELY ACCESSED BY OPERATORS WITHOUT THE NEED FOR TRAFFIC MANAGEMENT

CP7. MAXIMUM TEST POINT SPACING IS 250m, AND AT LOCATIONS SPECIFIED ON PLAN AND LONG SECTIONS DRAWINGS (AND IN ACCORDANCE WITH A0012-0025-C-CP-MEM-1).

CP8. ALL RUBBER RING JOINTS SHALL BE PROVIDED WITH CROSSBONDS IN ACCORDANCE TO SA WATER DRG STD-04-00001_10.

LINK UPS

L1. THE CONTRACTOR SHALL GIVE SA WATER A MINIMUM OF 20 WORKING DAYS 'NOTICE OF INTENT' TO CARRY OUT ANY LINK-UP.

L2. SA WATER WILL ARRANGE FOR THE SHUTTING DOWN AND CHARGING UP OF MAINS AS NECESSARY FOR THE LINK-UP PROCESS.

L3. THE CONTRACTOR SHALL NOT OPEN OR CLOSE ANY VALVES ON EXISTING MAINS UNLESS OTHERWISE DIRECTED BY SA WATER.

L4. ONCE THE MAIN HAS BEEN TESTED TO THE SATISFACTION OF SA WATER IN ACCORDANCE WITH THE SPECIFICATION AND THE LINK-UP COMPLETED, THE CONTRACTOR SHALL REINSTATE THE EXCAVATION IN ACCORDANCE WITH THE DRAWINGS & SPECIFICATION..

L5. WHEN ADVISED BY THE CONTRACTOR THAT THE LINK-UP IS COMPLETE INCLUDING THE ANCHOR/THRUST BLOCKS, SA WATER WILL ARRANGE TO CHARGE UP AND DISINFECT THE NEW MAIN.

L6. CONTRACTOR SHALL VERIFY LOCATION, DEPTH, WALL THICKNESS, OVALITY & OUTSIDE DIAMETER OF THE LINK-UP POINT TO EXISTING WATER MAIN PRIOR TO COMMENCING CONSTRUCTION WORKS AND NOTIFY SA WATER OF ANY DISCREPANCIES.

L7. THE CONTRACTOR SHALL PROVIDE A TESTING, COMMISSIONING & LINK UP METHODOLOGY TO SA WATER FOR APPROVAL, AT LEAST ONE MONTH PRIOR TO COMMENCING ANY LINK UP.

L8. CCTV INSPECTION OF NEW MAINS FOR DEFECTS & DEBRIS IN THE PIPE MUST BE COMPLETED PRIOR TO COMMISSIONING & TESTING WORKS IN ACCORDANCE WITH TS0524.

SERVICES

SE1. THE CONTRACTOR SHALL BE RESPONSIBLE FOR LOCATING AND PROVING ALL SERVICES ON SITE PRIOR TO COMMENCEMENT OF WORK. EXISTING SERVICES SHOWN ARE APPROXIMATE ONLY. APPROPRIATE PROCEDURES (INCLUDING DEPTHING AND LEVELING), PRECAUTIONS AND CARE SHALL BE TAKEN WHEN WORKING IN PROXIMITY OF ANY SERVICES. IT SHALL BE NOTED THAT THERE MAY BE OTHER EXISTING UNDERGROUND SERVICES IN THE VICINITY OF WORKS OTHER THAN THOSE SHOWN ON DRAWINGS.

SE2. ANY RELOCATION OR RE-ALIGNMENT WORKS SHALL BE APPROVED BY THE SUPERINTENDENT PRIOR TO CONSTRUCTION. THE ADOPTED ALIGNMENTS SHALL BE DOCUMENTED IN AS-CONSTRUCTED DRAWINGS.

SE3. FOR WORKS LOCATED IN THE VICINITY OF EXISTING POWER LINES, THE CONTRACTOR SHALL COMPLY WITH ALL STATUTORY REQUIREMENTS. FOR HV UNDERGROUND CABLES CONTACT ELECTRICITY AUTHORITY FOR SPECIFIC LOCATION AND CLEARANCE REQUIREMENTS.

SE4. RAIL, IRRIGATION AND OTHER SERVICES MAY EXIST IN VICINITY OF WORKS, THE CONTRACTOR SHALL LIAISE WITH RAIL AND SERVICE AUTHORITIES AND LAND OWNERS TO CONFIRM SERVICE LOCATIONS.

SE5. THE CONTRACTOR MUST ENSURE THAT THE EXISTING SERVICES ARE MAINTAINED IN AN OPERATIONAL CONDITION WHILE THE CONSTRUCTION WORK IS IN PROGRESS. WHERE ANY SERVICE NEEDS TO BE DISCONNECTED TO ENABLE TRANSFER TO A NEW CONNECTION. THE SERVICE AUTHORITY AND THE PROPERTY OCCUPANT MUST BE ADVISED 2 DAYS BEFORE AND THE TIMING AGREED.

SE6. CLEARANCES BETWEEN THE NEW WATER MAIN AND EXISTING SERVICES SHALL BE IN ACCORDANCE WITH WSA03 AND TS0136.

SE7. NO EXCAVATION SHALL OCCUR WITHIN 3 METRES OF THE BASE OF A STOBIE POLE WITHOUT SAPN APPROVAL.

ENVIRONMENT AND APPROVALS

EA1. ASSESSMENTS, MANAGEMENT PLANS, PERMITS AND APPROVAL RELATING TO THE RELEVANT ENVIRONMENTAL , NATIVE VEGETATION AND HERITAGE AUTHORITIES ARE TO BE UNDERTAKEN PRIOR TO CONSTRUCTION AND ARE THE RESPONSIBILITY OF SA WATER.

EA2. VEGETATION SHALL ONLY BE CLEARED, DISTURBED OR TRAFFICKED WITHIN THE CONFINES AS STIPULATED IN THE SPECIFICATION. CLEARING, DISTURBANCE AND TRAFFICKING BEYOND THESE EXTENTS SHALL NOT BE PERMITTED WITHOUT THE WRITTEN APPROVAL OF SA WATER.

EA3. PIPELINE ALIGNMENT AMENDMENTS THAT IMPACT ON TREE PROTECTION ZONES AND/OR HERITAGE PLACES OUTSIDE DEVELOPMENT APPROVAL REQUIREMENTS MAY REQUIRE VARIATION(S) TO THE APPROVAL CONDITIONS, OR ACQUISITION OF NEW APPROVALS.

EA4. REFER TO THE CONSTRUCTION ENVIRONMENTAL MANAGEMENT PLAN REQUIREMENTS FOR MANAGEMENT AND MITIGATION MEASURES FOR ALL TREES, INCLUDING TREES TO BE MONITORED.

EA5. TREE TRIMMING SHALL BE IN ACCORDANCE WITH SPECIALIST ARBORIST'S RECOMMENDATIONS, AS REQUIRED. REMOVAL OF TREES SHALL BE PRE-APPROVED AND NOT UNDERTAKEN WITHOUT PRIOR APPROVAL OF THE RELEVANT AUTHORITY.

EA6. THE CONTRACTOR MUST OBTAIN NECESSARY APPROVALS FROM ALL RELEVANT AUTHORITIES, EXCLUDING ANY APPROVALS OBTAINED BY DIT UNDER CONTRACT.

EA7. NO SEDIMENT LADEN MATERIAL SHALL BE ALLOWED TO ENTER THE STORMWATER SYSTEM OR WATER COURSES. APPROPRIATE SEDIMENT CONTROL MEASURES MUST BE PUT IN PLACE.

CIVIL WORKS

C1. ALL PERMANENT EARTHWORKS SHALL BE CARRIED OUT IN ACCORDANCE WITH DRAWINGS AND THE SPECIFICATIONS.

C2. TRENCHES ARE TO BE CONSTRUCTED IN ACCORDANCE WITH THE DRAWINGS AND AS SUPPLEMENTED BY SA WATER, SECTION 3 OF THE WSCM. AND PLCC OR DIT'S ROAD REINSTATEMENT SPECIFICATIONS AS APPROPRIATE.

C3. REFER TO STANDARD DRAWINGS FOR BACKFILL DETAILS. MINIMUM COVER IS 1000mm UNO.

C4. ALL AFFECTED SURFACES AND INFRASTRUCTURE SHALL BE REINSTATED TO THEIR ORIGINAL CONDITION AND IN ACCORDANCE WITH THE SPECIFICATIONS.

C5. THE CONTRACTOR SHALL MAINTAIN EXCAVATIONS FREE OF WATER DURING CONSTRUCTION.

C6. THE CONTRACTOR SHALL BE RESPONSIBLE FOR MAINTAINING ALL STRUCTURES IN A STABLE CONDITION AND ENSURE NO PART OF THE STRUCTURE IS OVER STRESSED BY CONSTRUCTION LOADS AND ACTIVITIES. TEMPORARY BRACING SHALL BE PROVIDED BY THE CONTRACTOR AS REQUIRED.

C7. THE CONTRACTOR SHALL UNDERTAKE ALL TEMPORARY, PERMANENT AND PROPOSED WORKS TO ENSURE A SAFE AND STABLE WORK SITE. INCLUDING EXCAVATION AND STABILITY OF EXISTING INFRASTRUCTURE ADJACENT TO THE PROPOSED WORKS.

C8. DIMENSIONS RELEVANT TO SETTING OUT AND OFF-SITE WORKS SHALL BE VERIFIED BY THE CONTRACTOR BEFORE CONSTRUCTION OR FABRICATION IS COMMENCED. THE DRAWINGS SHALL NOT BE SCALED.

C9. THE CONTRACTOR SHALL CONFIRM FINAL ALIGNMENTS, GRADING, DIMENSIONS, QUANTITIES AND LEVEL OF ALL WORKS INCLUDING PIPEWORK, STEEL WORK, COVERS, OPENINGS, FITTINGS ETC.. PRIOR TO PROCUREMENT, FABRICATION AND CONSTRUCTION. ALL EXISTING LEVELS SHOWN ARE INDICATIVE THE CONTRACTOR SHALL CONFIRM LEVELS ON SITE PRIOR TO CONSTRUCTION.

REVISION PANEL

REV	DATE	DRN	DETAILS	APR'D
0.1D	13.10.23	CSS	60% DESIGN	SW
0.1C	08.09.23	CSS	60% DRAFT DESIGN FOR REVIEW	SW
0.1B	14.07.23	CSS	30% CONCEPT DESIGN	SW
0.1A	07.06.23	CSS	30% CONCEPT DESIGN - DRAFT FOR REVIEW	SW

CURRENT REV CONTRACTOR: TONKIN / WSP CURRENT REV PROJECT: 220258

CURRENT REV AUTHORISED 13.10.23 J.TYLER SIGNATURE

DESIGN PANEL

DESIGNED	13.10.23	AUTHORISED	13.10.23
P.SWINCER/L.HAYSMAN		J.TYLER	
DRAWN	13.10.23	SIGNATURE	
C.SUTCLIFFE			
REVIEWED	13.10.23		
S.WHICHELO			

CONTRACTOR: TONKIN / WSP

Government of South Australia

SA Water

This drawing is the property of the SOUTH AUSTRALIAN WATER CORPORATION and shall not be copied or modified in part or in whole without authorization.

EYRE PENINSULA DESALINATION PLANT

TREATED WATER TRANSFER PIPELINE NETWORK & RETICULATION

NOTES

A1 SHT SIZE

TOTAL SHEETS:

PROJECT No: A0012-0025

0.1D REVISION

MAXIMO ID: P041992

SUPERSEDES:

DRAWING NUMBER

P041992-05-00001_02

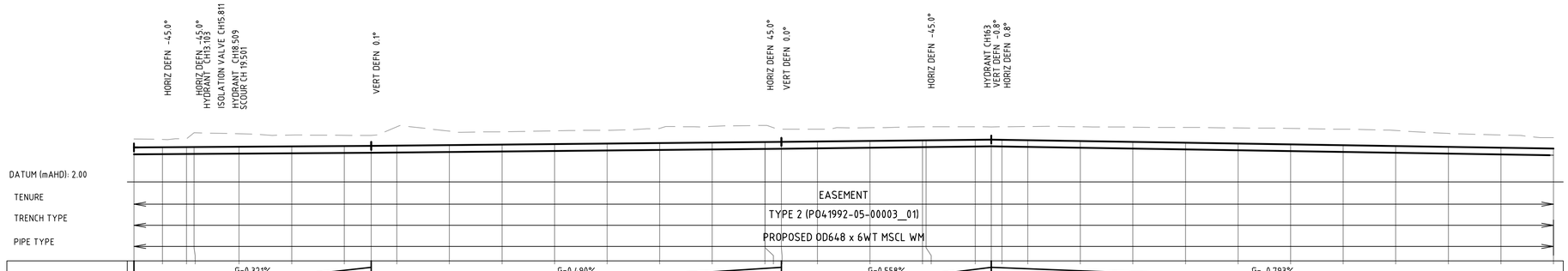

PIPE GRADIENT	G=0.321% L=45.108						G=0.490% L=78.031							G=0.558% L=39.930					G=-0.793% L=130.257										
DESIGN TOP (m AHD)	5.284	5.302	5.316 5.321	5.349	5.381	5.413	5.429	5.453	5.502	5.551	5.600	5.649	5.698	5.747	5.796 5.797 5.812	5.850	5.906	5.962 5.965	6.018	6.035 6.019	5.980	5.900	5.821	5.742	5.663	5.583	5.504	5.425	5.345	5.266	5.187
PIPE INVERT (m AHD)	4.642	4.660	4.674 4.679	4.707	4.739	4.771	4.787	4.811	4.860	4.909	4.958	5.007	5.056	5.105	5.154 5.155 5.170	5.208	5.264	5.320 5.323	5.376	5.393 5.377	5.338	5.258	5.179	5.100	5.021	4.941	4.862	4.783	4.703	4.624	4.545
EXISTING (m AHD)	6.084	6.045	6.111 6.084	6.583	6.468	6.435	6.429	7.240	6.830	6.776	6.861	6.913	7.104	7.289	7.379 7.369 7.912	7.016	7.154	7.248 7.253	7.249	7.235 7.245	7.273	7.247	7.216	7.195	7.139	7.090	7.023	6.890	6.613	6.466	6.207
PIPE COVER (m)	0.800	0.744	0.794 1.393	1.234	1.087	1.023	1.000	1.787	1.328	1.225	1.260	1.264	1.406	1.542	1.583 1.583 1.200	1.166	1.248	1.287 1.288	1.232	1.200 1.227	1.293	1.347	1.395	1.453	1.476	1.507	1.519	1.465	1.267	1.200	1.020
CHAINAGE (m)	0.000	5.431	10.000 11.431	20.000	30.000	40.000	45.108	50.000	60.000	70.000	80.000	90.000	100.000	110.000	120.000 120.059 123.139	130.000	140.000	150.000 150.655	160.000	163.669 165.091	170.000	180.000	190.000	200.000	210.000	220.000	230.000	240.000	250.000	260.000	270.000

LONGITUDINAL PROFILE

HORIZONTAL SCALE 1 : 500
VERTICAL SCALE 1 : 250

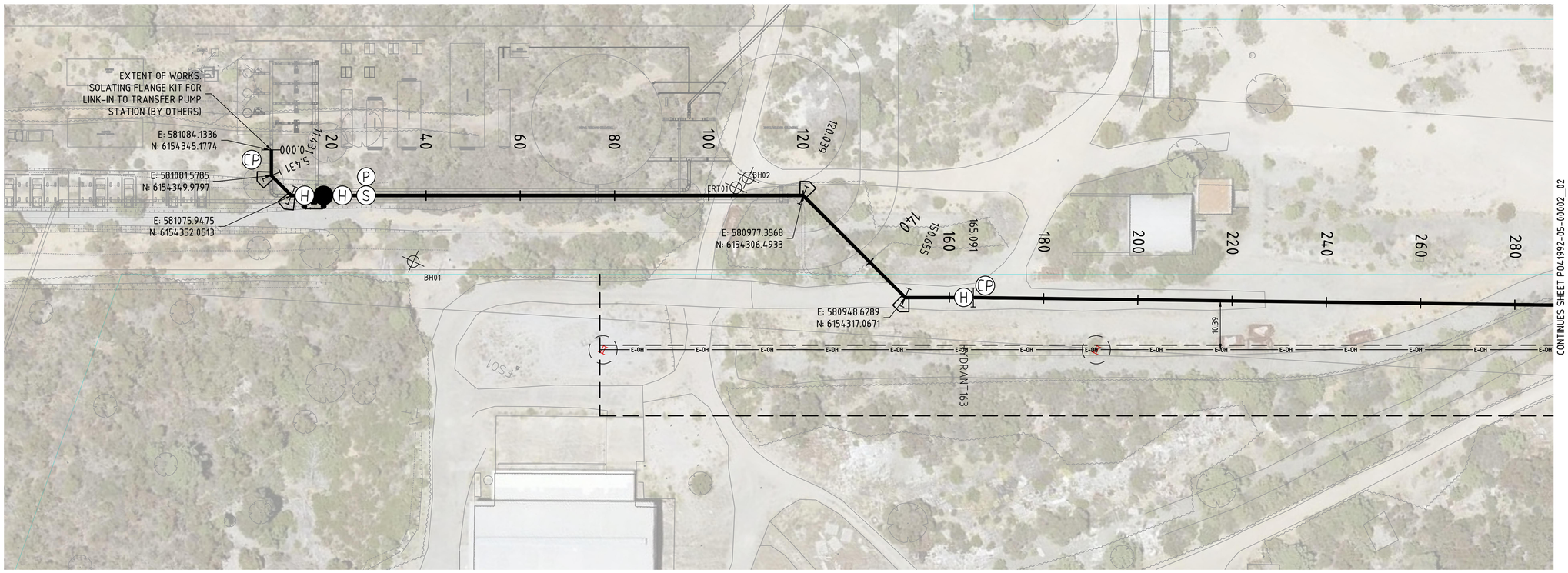

PLAN

SCALE 1:500

NOTES

1. FOR GENERAL NOTES REFER DRAWING P041992-05-00001_02.
2. PROVIDE CATHODIC PROTECTION TO SA WATER TS0440 & DRAWINGS STD-04-00001_(10,13,14 and 17).
3. GEOTECHNICAL PROPERTIES ALONG BLUE FIN ROAD BH12 - BH15 (REF: A0012-0025-GEO-REP-10002)
- FILL GENERALLY ENCOUNTERED UP TO 0.2-0.8 mBGL.
- INFERRED LOW STRENGTH LIMESTONE ENCOUNTERED BELOW FILL LEVEL (FROM 0.2-0.8 mBGL).
- GROUNDWATER NOT ENCOUNTERED.
4. GEOTECHNICAL PROPERTIES ALONG PROPER BAY ROAD BH7 - BH11 (REF: A0012-0025-GEO-REP-10002)
- FILL GENERALLY ENCOUNTERED UP TO 0.5-0.8 mBGL.
- LOOSE TO MEDIUM DENSE SAND ENCOUNTERED BELOW FILL LEVEL (FROM 0.5-0.8 mBGL).
- GROUNDWATER NOT ENCOUNTERED.
5. GEOTECHNICAL PROPERTIES ALONG GREYHOUND ROAD BH1 - BH6 (REF: A0012-0025-GEO-REP-10002)
- FILL GENERALLY ENCOUNTERED UP TO 0.15-0.6 mBGL.
- VERY LOOSE AND LOOSE SAND ENCOUNTERED BELOW FILL LEVEL (FROM 0.15-0.6 mBGL).
- LOW LYING GROUND, SHALLOW GROUNDWATER ENCOUNTERED.
6. GEOTECHNICAL PROPERTIES ALONG EASEMENT TP01 - TP07 (REF: A0012-0025-GEO-REP-10002)
- FILL GENERALLY ENCOUNTERED UP TO 0.2-0.6 mBGL.
- INFERRED LOW STRENGTH LIMESTONE ENCOUNTERED BELOW FILL LEVEL (FROM 0.2-0.6 mBGL).
- NO GROUNDWATER ENCOUNTERED. GROUNDWATER LEVEL SUBJECT TO TIDAL MOVEMENTS.
7. REFER TYPICAL CROSS SECTION 'D' FOR PIPE IN SHARED SAPN EASEMENT (P041992-05-00003_08).

LEGEND

- NEW OD648 X 6WT MSCL SINTAJOINT TRANSFER MAIN
- DN600 ISOLATION VALVE REFER DRG P041992-05-00003_04
- HYDRANT
- SCOUR
- DN1200 SCOUR PIT REFER DRG P041992-05-00003_05
- THRUST BLOCK, REFER DETAIL SHEET P041992-05-00003_02
- E-UG — EX. UNDERGROUND ELECTRICAL
- E-OH — EX. OVERHEAD ELECTRICAL
- HVE-OH — EX. H/V OVERHEAD ELEC.
- HVE-UG — EX. H/V UNDERGROUND ELEC.
- T — EX. TELECOM
- S — EX. SEWER / WASTE PIPE
- W — EX. WATER MAIN
- SW — EX. STORMWATER
- DCDB BOUNDARY
- EX. RAILWAY CORRIDOR
- BOREHOLE LOCATION
- STOBIE POLE WITH 3m EXCLUSION ZONE
- EX. VEGETATION TO BE REMOVED
- E-OH — PROPOSED OVERHEAD ELECTRICAL (PRINCIPAL SUPPLIED)
- PROPOSED POWER POLE LOCATION
- PRINCIPAL SUPPLIED LAND PARCEL BOUNDARY (2x 15m WIDE EASEMENTS)
- CP — CATHODIC PROTECTION TEST POINT, REFER GENERAL NOTES SHEET P041992-05-00001_02
- TR1 — TRANSFORMER RECTIFIER FOR ICCP ANODE (CP)

DIAL BEFORE YOU DIG
www.1100.com.au

WARNING
BEWARE OF OVERHEAD AND UNDERGROUND SERVICES

THE LOCATION OF OVERHEAD AND UNDERGROUND SERVICES ARE APPROXIMATE ONLY AND THEIR EXACT POSITION SHOULD BE PROVEN ON SITE
NO GUARANTEE IS GIVEN THAT ALL SERVICES ARE SHOWN
REFER TO ASSET OWNER FOR THEIR CLEARANCE AND APPROACH REQUIREMENTS

NOT FOR CONSTRUCTION

1:250 (A1); 1:500 (A3) — 1:500 (A1); 1:1000 (A3)

REVISION PANEL

REV	DATE	DRN	DETAILS	APR'D
0.1D	13.10.23	CSS	60% DESIGN	SW
0.1C	08.09.23	CSS	60% DRAFT DESIGN FOR REVIEW	SW
0.1B	14.07.23	CSS	30% CONCEPT DESIGN	SW
0.1A	07.06.23	CSS	30% CONCEPT DESIGN - DRAFT FOR REVIEW	SW

CURRENT REV CONTRACTOR: TONKIN / WSP — CURRENT REV PROJECT: 220258

CURRENT REV AUTHORISED 13.10.23 — J.TYLER — SIGNATURE

DESIGN PANEL

DESIGNED 13.10.23 — P.SWINCER/L.HAYSMAN
DRAWN 13.10.23 — C.SUTCLIFFE
REVIEWED 13.10.23 — S.WHICHELO
AUTHORISED 13.10.23 — J.TYLER — SIGNATURE
CONTRACTOR: TONKIN / WSP

Government of South Australia — SA Water

This drawing is the property of the SOUTH AUSTRALIAN WATER CORPORATION and shall not be copied or modified in part or in whole without authorization.

EYRE PENINSULA DESALINATION PLANT

TREATED WATER TRANSFER PIPELINE NETWORK & RETICULATION

PLAN & LONGITUDINAL PROFILE CHN0 - 270

A1 SHT SIZE — TOTAL SHEETS: 27 — PROJECT No: A0012-0025 — 0.1D REVISION

MAXIMO ID: P041992

SUPERSEDES:

DRAWING NUMBER P041992-05-00002_01

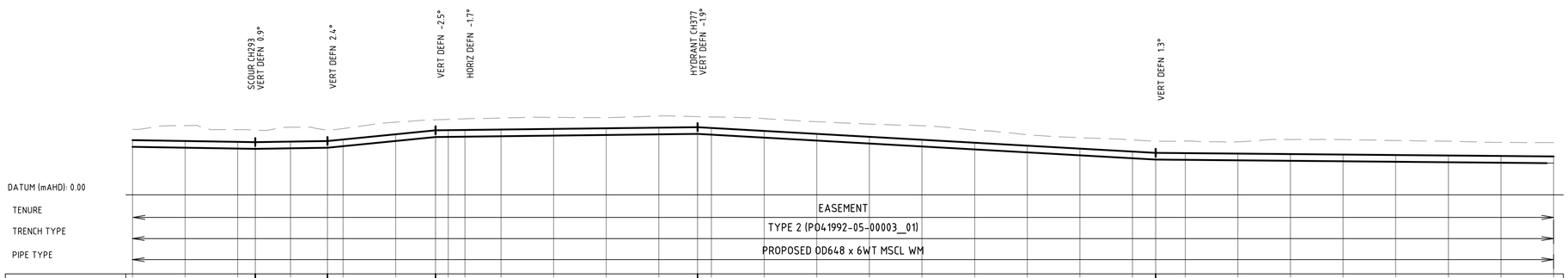

PIPE GRADIENT	G=-0.793% L=130.257	G=0.763% L=13.740	G=4.954% L=20.525	G=0.587% L=49.778	G=-2.793% L=87.037	G=-0.445% L=129.718

CHAINAGE (m)	DESIGN TOP (m AHD)	PIPE INVERT (m AHD)	EXISTING (m AHD)	PIPE COVER (m)
270.000	5.187	4.545	6.207	1.020
280.000	5.108	4.466	6.567	1.459
290.000	5.028	4.386	6.171	1.142
293.325	5.002	4.360	6.130	1.128
300.000	5.053	4.411	6.400	1.347
307.065	5.107	4.465	6.112	1.005
310.000	5.252	4.610	6.286	1.034
320.000	5.148	5.106	6.880	1.132
327.590	6.124	5.482	7.124	1.000
330.000	6.138	5.496	7.159	1.021
333.157	6.156	5.514	7.208	1.051
340.000	6.197	5.555	7.282	1.085
350.000	6.255	5.613	7.340	1.085
360.000	6.314	5.672	7.314	1.000
370.000	6.373	5.731	7.470	1.098
377.368	6.416	5.774	7.416	1.000
380.000	6.343	5.701	7.389	1.047
390.000	6.063	5.421	7.231	1.167
400.000	5.784	5.142	6.937	1.153
410.000	5.505	4.863	6.706	1.202
420.000	5.225	4.583	6.563	1.338
430.000	4.946	4.304	6.129	1.183
440.000	4.667	4.025	5.700	1.033
450.000	4.387	3.745	5.421	1.034
460.000	4.108	3.466	5.211	1.103
464.415	3.985	3.343	5.080	1.095
470.000	3.960	3.318	5.090	1.131
480.000	3.915	3.273	5.031	1.116
490.000	3.871	3.229	5.245	1.314
500.000	3.826	3.184	5.231	1.405
510.000	3.782	3.140	5.152	1.370
520.000	3.737	3.095	5.079	1.341
530.000	3.693	3.051	4.977	1.284
540.000	3.648	3.006	4.943	1.294

LONGITUDINAL PROFILE

HORIZONTAL SCALE 1 : 500
VERTICAL SCALE 1 : 250

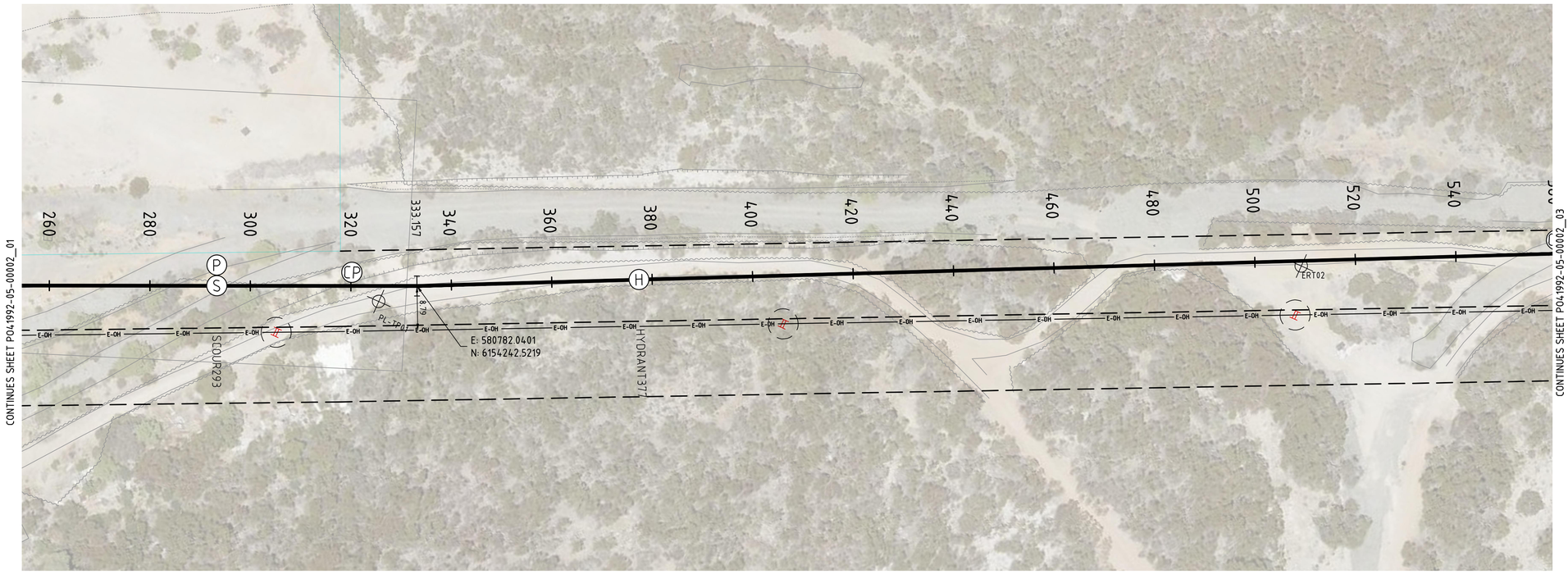

PLAN

SCALE 1:500

NOTES

1. FOR GENERAL NOTES REFER DRAWING P041992-05-00001_02.
2. PROVIDE CATHODIC PROTECTION TO SA WATER TS0440 & DRAWINGS STD-04-00001_(10,13,14 and 17).
3. GEOTECHNICAL PROPERTIES ALONG BLUE FIN ROAD BH12 - BH15 (REF: A0012-0025-GEO-REP-10002)
- FILL GENERALLY ENCOUNTERED UP TO 0.2-0.8 mBGL.
- INFERRED LOW STRENGTH LIMESTONE ENCOUNTERED BELOW FILL LEVEL (FROM 0.2-0.8 mBGL).
- GROUNDWATER NOT ENCOUNTERED.
4. GEOTECHNICAL PROPERTIES ALONG PROPER BAY ROAD BH7 - BH11 (REF: A0012-0025-GEO-REP-10002)
- FILL GENERALLY ENCOUNTERED UP TO 0.5-0.8 mBGL.
- LOOSE TO MEDIUM DENSE SAND ENCOUNTERED BELOW FILL LEVEL (FROM 0.5-0.8 mBGL).
- GROUNDWATER NOT ENCOUNTERED.
5. GEOTECHNICAL PROPERTIES ALONG GREYHOUND ROAD BH1 - BH6 (REF: A0012-0025-GEO-REP-10002)
- FILL GENERALLY ENCOUNTERED UP TO 0.15-0.6 mBGL.
- VERY LOOSE AND LOOSE SAND ENCOUNTERED BELOW FILL LEVEL (FROM 0.15-0.6 mBGL).
- LOW LYING GROUND, SHALLOW GROUNDWATER ENCOUNTERED.
6. GEOTECHNICAL PROPERTIES ALONG EASEMENT TP01 - TP07 (REF: A0012-0025-GEO-REP-10002)
- FILL GENERALLY ENCOUNTERED UP TO 0.2-0.6 mBGL.
- INFERRED LOW STRENGTH LIMESTONE ENCOUNTERED BELOW FILL LEVEL (FROM 0.2-0.6 mBGL).
- NO GROUNDWATER ENCOUNTERED. GROUNDWATER LEVEL SUBJECT TO TIDAL MOVEMENTS.
7. REFER TYPICAL CROSS SECTION 'D' FOR PIPE IN SHARED SAPN EASEMENT (P041992-05-00003_08).

LEGEND

- NEW OD648 X 6WT MSCL SINTAJOINT TRANSFER MAIN
- DN600 ISOLATION VALVE REFER DRG P041992-05-00003_04
- HYDRANT
- SCOUR
- DN1200 SCOUR PIT REFER DRG P041992-05-00003_05
- THRUST BLOCK, REFER DETAIL SHEET P041992-05-00003_02
- E-UG — EX. UNDERGROUND ELECTRICAL
- E-OH — EX. OVERHEAD ELECTRICAL
- HVE-OH — EX. H/V OVERHEAD ELEC.
- HVE-UG — EX. H/V UNDERGROUND ELEC.
- T — EX. TELECOM
- S — EX. SEWER / WASTE PIPE
- W — EX. WATER MAIN
- SW — EX. STORMWATER
- DCDB BOUNDARY
- EX. RAILWAY CORRIDOR
- BOREHOLE LOCATION
- STOBIE POLE WITH 3m EXCLUSION ZONE
- EX. VEGETATION TO BE REMOVED
- E-OH — PROPOSED OVERHEAD ELECTRICAL (PRINCIPAL SUPPLIED)
- PROPOSED POWER POLE LOCATION
- PRINCIPAL SUPPLIED LAND PARCEL BOUNDARY (2x 15m WIDE EASEMENTS)
- CP — CATHODIC PROTECTION TEST POINT, REFER GENERAL NOTES SHEET P041992-05-00001_02
- TR1 — TRANSFORMER RECTIFIER FOR ICCP ANODE (CP)

DIAL BEFORE YOU DIG
www.1100.com.au

WARNING
BEWARE OF OVERHEAD AND UNDERGROUND SERVICES

THE LOCATION OF OVERHEAD AND UNDERGROUND SERVICES ARE APPROXIMATE ONLY AND THEIR EXACT POSITION SHOULD BE PROVEN ON SITE
NO GUARANTEE IS GIVEN THAT ALL SERVICES ARE SHOWN
REFER TO ASSET OWNER FOR THEIR CLEARANCE AND APPROACH REQUIREMENTS

NOT FOR CONSTRUCTION

0 2.5 5 10 15 — 1:250 (A1); 1:500 (A3)
0 5 10 20 30 — 1:500 (A1); 1:1000 (A3)

REVISION PANEL

REV	DATE	DRN	DETAILS	APR'D
0.1D	13.10.23	CSS	60% DESIGN	SW
0.1C	08.09.23	CSS	60% DRAFT DESIGN FOR REVIEW	SW
0.1B	14.07.23	CSS	30% CONCEPT DESIGN	SW
0.1A	07.06.23	CSS	30% CONCEPT DESIGN - DRAFT FOR REVIEW	SW

CURRENT REV CONTRACTOR: TONKIN / WSP
CURRENT REV PROJECT: 220258

CURRENT REV AUTHORISED 13.10.23
J.TYLER
SIGNATURE

DESIGN PANEL

DESIGNED	13.10.23	AUTHORISED	13.10.23
P.SWINCER/L.HAYSMAN		J.TYLER	
DRAWN	13.10.23	SIGNATURE	
C.SUTCLIFFE			
REVIEWED	13.10.23		
S.WHICHELO			

CONTRACTOR: TONKIN / WSP

Government of South Australia
SA Water

This drawing is the property of the SOUTH AUSTRALIAN WATER CORPORATION and shall not be copied or modified in part or in whole without authorization.

EYRE PENINSULA DESALINATION PLANT

TREATED WATER TRANSFER PIPELINE
NETWORK & RETICULATION
PLAN & LONGITUDINAL PROFILE CHN270 - 540

A1 SHT SIZE
TOTAL SHEETS:
PROJECT No: A0012-0025
0.1D REVISION
MAXIMO ID: P041992
SUPERSEDES:
DRAWING NUMBER
P041992-05-00002_02

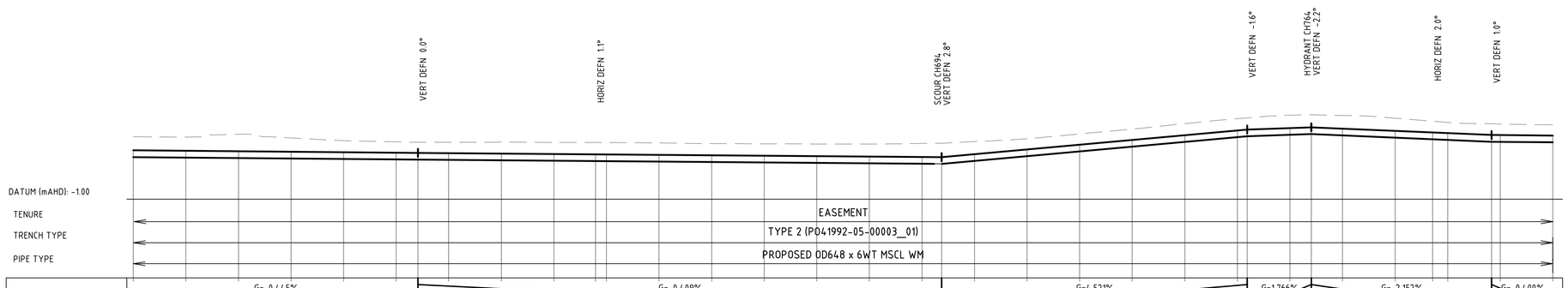

PIPE GRADIENT	G=-0.445%						G=-0.409%												G=4.521%									G=1.766%		G=-2.152%									G=-0.400%
	L=129.718						L=99.618												L=58.114									L=12.200		L=34.288									L=11.907
DESIGN TOP (m AHD)	3.648	3.604	3.559	3.515	3.470	3.426	3.408	3.383	3.343	3.302	3.269 3.261	3.220	3.179	3.138	3.097	3.056	3.015	3.000	3.283	3.735	4.187	4.640	5.092	5.544 5.628	5.771	5.843	5.715	5.500	5.346 5.285	5.105 5.098	5.059
PIPE INVERT (m AHD)	3.006	2.962	2.917	2.873	2.828	2.784	2.766	2.741	2.701	2.660	2.627 2.619	2.578	2.537	2.496	2.455	2.414	2.373	2.358	2.641	3.093	3.545	3.998	4.450	4.902 4.986	5.129	5.201	5.073	4.858	4.704 4.643	4.463 4.456	4.417
EXISTING (m AHD)	4.943	4.895	5.177	4.825	4.578	4.450	4.407	4.413	4.435	4.400	4.388 4.387	4.351	4.287	4.271	4.256	4.252	4.300	4.323	4.480	4.753	5.207	5.676	6.192	6.654 6.730	6.988	7.036	6.971	6.707	6.626 6.314	6.173 6.157	6.096
PIPE COVER (m)	1.294	1.291	1.617	1.310	1.107	1.025	1.000	1.030	1.092	1.098	1.119 1.126	1.131	1.108	1.133	1.159	1.195	1.285	1.323	1.197	1.018	1.019	1.036	1.101	1.110 1.102	1.216	1.193	1.256	1.207	1.080 1.030	1.068 1.058	1.038
CHAINAGE (m)	540.000	550.000	560.000	570.000	580.000	590.000	594.124	600.000	610.000	620.000	627.934 630.000	640.000	650.000	660.000	670.000	680.000	690.000	693.741	700.000	710.000	720.000	730.000	740.000	750.000 751.855	760.000	764.055	770.000	780.000	787.139 790.000	798.343 800.000	810.000

LONGITUDINAL PROFILE

HORIZONTAL SCALE 1 : 500

VERTICAL SCALE 1 : 250

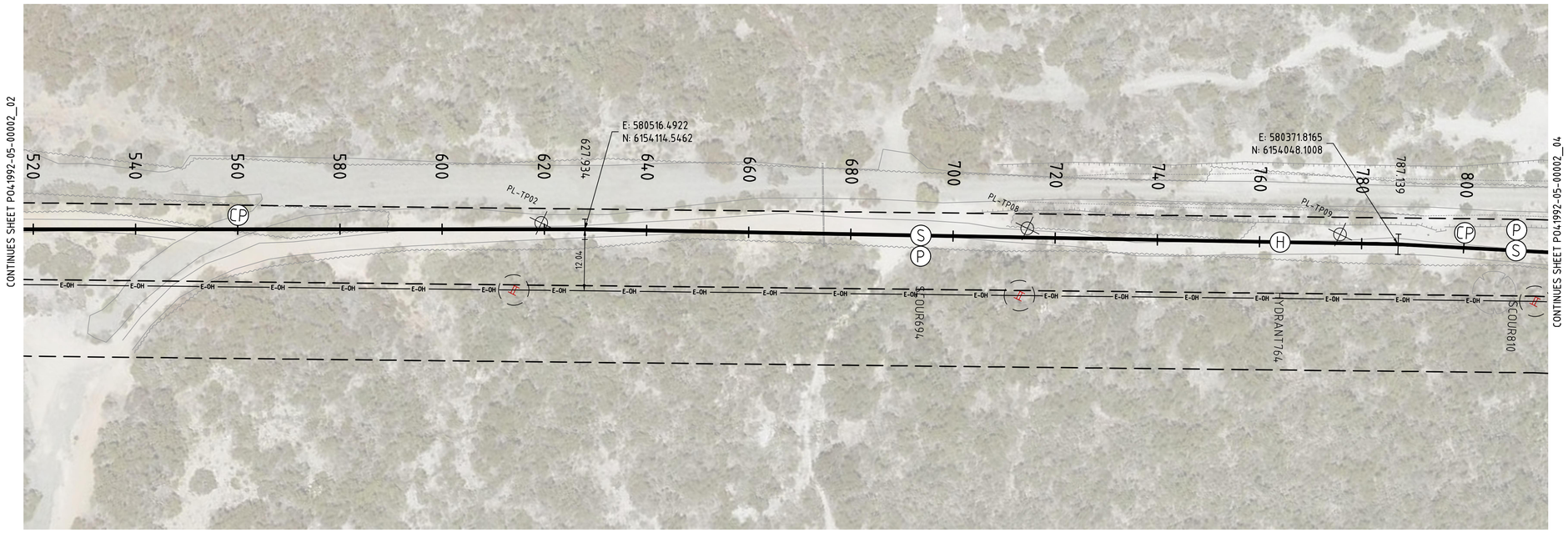

PLAN

SCALE 1:500

NOTES

1. FOR GENERAL NOTES REFER DRAWING P041992-05-00001_02.
2. PROVIDE CATHODIC PROTECTION TO SA WATER TS0440 & DRAWINGS STD-04-00001_(10,13,14 and 17).
3. GEOTECHNICAL PROPERTIES ALONG BLUE FIN ROAD BH12 - BH15 (REF: A0012-0025-GEO-REP-10002)
- FILL GENERALLY ENCOUNTERED UP TO 0.2-0.8 mBGL.
- INFERRED LOW STRENGTH LIMESTONE ENCOUNTERED BELOW FILL LEVEL (FROM 0.2-0.8 mBGL).
- GROUNDWATER NOT ENCOUNTERED.
4. GEOTECHNICAL PROPERTIES ALONG PROPER BAY ROAD BH7 - BH11 (REF: A0012-0025-GEO-REP-10002)
- FILL GENERALLY ENCOUNTERED UP TO 0.5-0.8 mBGL.
- LOOSE TO MEDIUM DENSE SAND ENCOUNTERED BELOW FILL LEVEL (FROM 0.5-0.8 mBGL).
- GROUNDWATER NOT ENCOUNTERED.
5. GEOTECHNICAL PROPERTIES ALONG GREYHOUND ROAD BH1 - BH6 (REF: A0012-0025-GEO-REP-10002)
- FILL GENERALLY ENCOUNTERED UP TO 0.15-0.6 mBGL.
- VERY LOOSE AND LOOSE SAND ENCOUNTERED BELOW FILL LEVEL (FROM 0.15-0.6 mBGL).
- LOW LYING GROUND, SHALLOW GROUNDWATER ENCOUNTERED.
6. GEOTECHNICAL PROPERTIES ALONG EASEMENT TP01 - TP07 (REF: A0012-0025-GEO-REP-10002)
- FILL GENERALLY ENCOUNTERED UP TO 0.2-0.6 mBGL.
- INFERRED LOW STRENGTH LIMESTONE ENCOUNTERED BELOW FILL LEVEL (FROM 0.2-0.6 mBGL).
- NO GROUNDWATER ENCOUNTERED. GROUNDWATER LEVEL SUBJECT TO TIDAL MOVEMENTS.
7. REFER TYPICAL CROSS SECTION 'D' FOR PIPE IN SHARED SAPN EASEMENT (P041992-05-00003_08).

LEGEND

- NEW OD648 X 6WT MSCL SINTAJOINT TRANSFER MAIN
- DN600 ISOLATION VALVE REFER DRG P041992-05-00003_04
- HYDRANT
- SCOUR
- DN1200 SCOUR PIT REFER DRG P041992-05-00003_05
- THRUST BLOCK, REFER DETAIL SHEET P041992-05-00003_02
- E-UG — EX. UNDERGROUND ELECTRICAL
- E-OH — EX. OVERHEAD ELECTRICAL
- HVE-OH — EX. H/V OVERHEAD ELEC.
- HVE-UG — EX. H/V UNDERGROUND ELEC.
- T — EX. TELECOM
- S — EX. SEWER / WASTE PIPE
- W — EX. WATER MAIN
- SW — EX. STORMWATER
- DCDB BOUNDARY
- EX. RAILWAY CORRIDOR
- BOREHOLE LOCATION
- STOBIE POLE WITH 3m EXCLUSION ZONE
- EX. VEGETATION TO BE REMOVED
- E-OH — PROPOSED OVERHEAD ELECTRICAL (PRINCIPAL SUPPLIED)
- PROPOSED POWER POLE LOCATION
- PRINCIPAL SUPPLIED LAND PARCEL BOUNDARY (2x 15m WIDE EASEMENTS)
- CP — CATHODIC PROTECTION TEST POINT, REFER GENERAL NOTES SHEET P041992-05-00001_02
- TR1 — TRANSFORMER RECTIFIER FOR ICCP ANODE (CP)

WARNING
BEWARE OF OVERHEAD AND UNDERGROUND SERVICES

THE LOCATION OF OVERHEAD AND UNDERGROUND SERVICES ARE APPROXIMATE ONLY AND THEIR EXACT POSITION SHOULD BE PROVEN ON SITE
NO GUARANTEE IS GIVEN THAT ALL SERVICES ARE SHOWN
REFER TO ASSET OWNER FOR THEIR CLEARANCE AND APPROACH REQUIREMENTS

NOT FOR CONSTRUCTION

0 2.5 5 10 15 — 1:250 (A1); 1:500 (A3)

0 5 10 20 30 — 1:500 (A1); 1:1000 (A3)

REVISION PANEL

REV	DATE	DRN	DETAILS	APR'D
0.1D	13.10.23	CSS	60% DESIGN	SW
0.1C	08.09.23	CSS	60% DRAFT DESIGN FOR REVIEW	SW
0.1B	14.07.23	CSS	30% CONCEPT DESIGN	SW
0.1A	07.06.23	CSS	30% CONCEPT DESIGN - DRAFT FOR REVIEW	SW

CURRENT REV CONTRACTOR: TONKIN / WSP — CURRENT REV PROJECT: 220258

CURRENT REV AUTHORISED 13.10.23 — J.TYLER — SIGNATURE

DESIGN PANEL

DESIGNED	13.10.23	AUTHORISED	13.10.23
P.SWINCER/L.HAYSMAN		J.TYLER	
DRAWN	13.10.23	SIGNATURE	
C.SUTCLIFFE			
REVIEWED	13.10.23		
S.WHICHELO			

CONTRACTOR: TONKIN / WSP

Government of South Australia — SA Water

This drawing is the property of the SOUTH AUSTRALIAN WATER CORPORATION and shall not be copied or modified in part or in whole without authorization.

EYRE PENINSULA DESALINATION PLANT

TREATED WATER TRANSFER PIPELINE NETWORK & RETICULATION

PLAN & LONGITUDINAL PROFILE CHN540 - 810

A1 SHT SIZE — TOTAL SHEETS: — PROJECT No: A0012-0025 — 0.1D REVISION

MAXIMO ID: P041992

SUPERSEDES:

DRAWING NUMBER P041992-05-00002_03

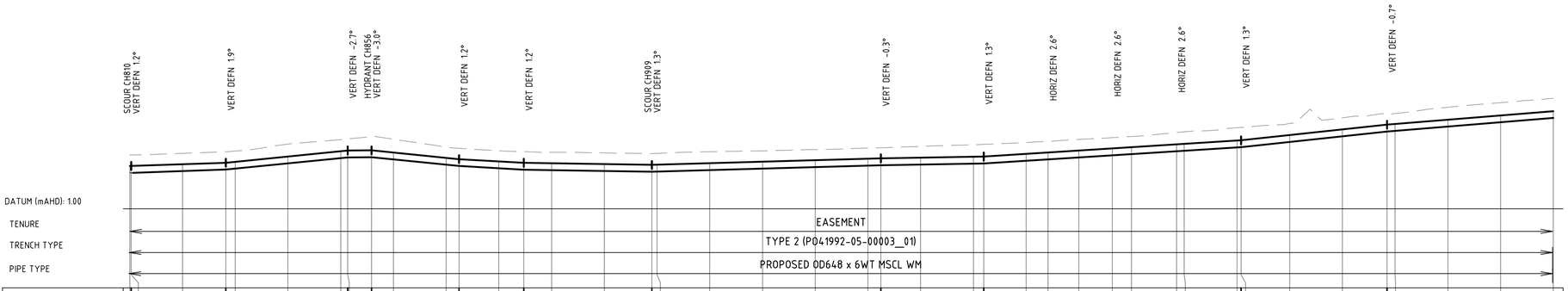

PIPE GRADIENT	G=-0.400% L=11.907	G=1.724% L=17.980	G=5.000% L=23.104	G=0.252% L=4.530	G=-4.990% L=16.586	G=-2.867% L=12.270	G=-0.793% L=24.306	G=1.432% L=43.439	G=0.850% L=19.500	G=3.154% L=48.789	G=5.343% L=27.702	G=4.077% L=49.504															
DESIGN TOP (m AHD)	5.059 5.057	5.226	5.367 5.456	5.956	6.456 6.523	6.534	6.328	5.829 5.706	5.490	5.354	5.313	5.233	5.162 5.176	5.319	5.462	5.605	5.748 5.784	5.848	5.933 5.949	6.203	6.334	6.518	6.719	6.834	7.104 7.149	7.465 7.488	7.982	8.517	8.968 9.031	9.439	9.847	10.254
PIPE INVERT (m AHD)	4.417 4.415	4.584	4.725 4.814	5.314	5.814 5.881	5.892	5.686	5.187 5.064	4.848	4.712	4.671	4.591	4.520 4.534	4.677	4.820	4.963	5.106 5.142	5.206	5.291 5.307	5.561	5.692	5.876	6.077	6.192	6.462 6.507	6.823 6.846	7.340	7.875	8.326 8.389	8.797	9.205	9.612
EXISTING (m AHD)	6.096 6.099	6.256	6.393 6.473	7.135	7.560 7.621	7.829	7.597	6.853 6.730	6.513	6.412	6.348	6.297	6.277 6.248	6.408	6.501	6.613	6.748 6.784	6.917	7.069 7.100	7.275	7.399	7.576	7.742	7.855	8.239 8.299	8.682 8.708	9.085	9.625	9.968 10.026	10.625	11.062	11.469
PIPE COVER (m)	1.038 1.042	1.030	1.026 1.017	1.179	1.104 1.098	1.295	1.270	1.025 1.024	1.023	1.057	1.035	1.063	1.065 1.072	1.089	1.039	1.007	1.000 1.000	1.069	1.136 1.150	1.072	1.065	1.057	1.023	1.021	1.136 1.150	1.218 1.219	1.102	1.108	1.000 0.995	1.186	1.216	1.215
CHAINAGE (m)	810.000 810.250	820.000	828.231 830.000	840.000	850.000 851.335	855.865	860.000	870.000 872.450	880.000	884.720	890.000	900.000	909.026 910.000	920.000	930.000	940.000	950.000 952.466	960.000	970.000 971.966	980.000	984.166	990.000	996.366	1000.000	1008.554 1010.000	1020.000 1020.755	1030.000	1040.000	1048.457 1050.000	1060.000	1070.000	1080.000

LONGITUDINAL PROFILE

HORIZONTAL SCALE 1 : 500

VERTICAL SCALE 1 : 250

NOTES

1. FOR GENERAL NOTES REFER DRAWING P041992-05-00001_02.
2. PROVIDE CATHODIC PROTECTION TO SA WATER TS0440 & DRAWINGS STD-04-00001_(10,13,14 and 17).
3. GEOTECHNICAL PROPERTIES ALONG BLUE FIN ROAD BH12 - BH15 (REF: A0012-0025-GEO-REP-10002)
- FILL GENERALLY ENCOUNTERED UP TO 0.2-0.8 mBGL.
- INFERRED LOW STRENGTH LIMESTONE ENCOUNTERED BELOW FILL LEVEL (FROM 0.2-0.8 mBGL).
- GROUNDWATER NOT ENCOUNTERED.
4. GEOTECHNICAL PROPERTIES ALONG PROPER BAY ROAD BH7 - BH11 (REF: A0012-0025-GEO-REP-10002)
- FILL GENERALLY ENCOUNTERED UP TO 0.5-0.8 mBGL.
- LOOSE TO MEDIUM DENSE SAND ENCOUNTERED BELOW FILL LEVEL (FROM 0.5-0.8 mBGL).
- GROUNDWATER NOT ENCOUNTERED.
5. GEOTECHNICAL PROPERTIES ALONG GREYHOUND ROAD BH1 - BH6 (REF: A0012-0025-GEO-REP-10002)
- FILL GENERALLY ENCOUNTERED UP TO 0.15-0.6 mBGL.
- VERY LOOSE AND LOOSE SAND ENCOUNTERED BELOW FILL LEVEL (FROM 0.15-0.6 mBGL).
- LOW LYING GROUND, SHALLOW GROUNDWATER ENCOUNTERED.
6. GEOTECHNICAL PROPERTIES ALONG EASEMENT TP01 - TP07 (REF: A0012-0025-GEO-REP-10002)
- FILL GENERALLY ENCOUNTERED UP TO 0.2-0.6 mBGL.
- INFERRED LOW STRENGTH LIMESTONE ENCOUNTERED BELOW FILL LEVEL (FROM 0.2-0.6 mBGL).
- NO GROUNDWATER ENCOUNTERED. GROUNDWATER LEVEL SUBJECT TO TIDAL MOVEMENTS.
7. REFER TYPICAL CROSS SECTION 'D' FOR PIPE IN SHARED SAPN EASEMENT (P041992-05-00003_08).

LEGEND

- NEW OD648 X 6WT MSCL SINTAJOINT TRANSFER MAIN
- DN600 ISOLATION VALVE REFER DRG P041992-05-00003_04
- HYDRANT
- SCOUR
- DN1200 SCOUR PIT REFER DRG P041992-05-00003_05
- THRUST BLOCK, REFER DETAIL SHEET P041992-05-00003_02
- E-UG — EX. UNDERGROUND ELECTRICAL
- E-OH — EX. OVERHEAD ELECTRICAL
- HVE-OH — EX. H/V OVERHEAD ELEC.
- HVE-UG — EX. H/V UNDERGROUND ELEC.
- T — EX. TELECOM
- S — EX. SEWER / WASTE PIPE
- W — EX. WATER MAIN
- SW — EX. STORMWATER
- DCDB BOUNDARY
- EX. RAILWAY CORRIDOR
- BOREHOLE LOCATION
- STOBIE POLE WITH 3m EXCLUSION ZONE
- EX. VEGETATION TO BE REMOVED
- E-OH — PROPOSED OVERHEAD ELECTRICAL (PRINCIPAL SUPPLIED)
- PROPOSED POWER POLE LOCATION
- PRINCIPAL SUPPLIED LAND PARCEL BOUNDARY (2x 15m WIDE EASEMENTS)
- CP — CATHODIC PROTECTION TEST POINT, REFER GENERAL NOTES SHEET P041992-05-00001_02
- TR1 — TRANSFORMER RECTIFIER FOR ICCP ANODE (CP)

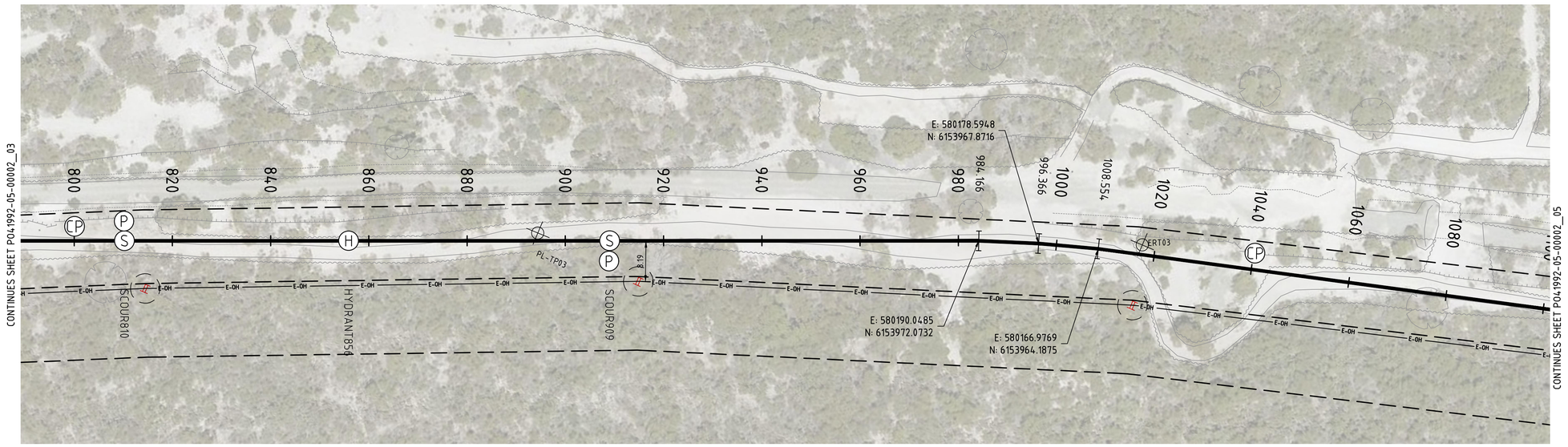

PLAN

SCALE 1:500

DIAL BEFORE YOU DIG
www.1100.com.au

WARNING
BEWARE OF OVERHEAD AND UNDERGROUND SERVICES

THE LOCATION OF OVERHEAD AND UNDERGROUND SERVICES ARE APPROXIMATE ONLY AND THEIR EXACT POSITION SHOULD BE PROVEN ON SITE
NO GUARANTEE IS GIVEN THAT ALL SERVICES ARE SHOWN
REFER TO ASSET OWNER FOR THEIR CLEARANCE AND APPROACH REQUIREMENTS

NOT FOR CONSTRUCTION

0 2.5 5 10 15 — 1:250 (A1); 1:500 (A3)
0 5 10 20 30 — 1:500 (A1); 1:1000 (A3)

REVISION PANEL

REV	DATE	DRN	DETAILS	APR'D
0.1D	13.10.23	CSS	60% DESIGN	SW
0.1C	08.09.23	CSS	60% DRAFT DESIGN FOR REVIEW	SW
0.1B	14.07.23	CSS	30% CONCEPT DESIGN	SW
0.1A	07.06.23	CSS	30% CONCEPT DESIGN - DRAFT FOR REVIEW	SW

CURRENT REV CONTRACTOR: TONKIN / WSP
CURRENT REV PROJECT: 220258

CURRENT REV AUTHORISED 13.10.23
J.TYLER
SIGNATURE

DESIGN PANEL

DESIGNED	13.10.23	AUTHORISED	13.10.23
P.SWINCER/L.HAYSMAN		J.TYLER	
DRAWN	13.10.23	SIGNATURE	
C.SUTCLIFFE			
REVIEWED	13.10.23		
S.WHICHELO			

CONTRACTOR: TONKIN / WSP

Government of South Australia
SA Water

This drawing is the property of the SOUTH AUSTRALIAN WATER CORPORATION and shall not be copied or modified in part or in whole without authorization.

EYRE PENINSULA DESALINATION PLANT

TREATED WATER TRANSFER PIPELINE NETWORK & RETICULATION

PLAN & LONGITUDINAL PROFILE CHN810 -1080

A1 SHT SIZE
TOTAL SHEETS:
PROJECT No: A0012-0025
0.1D REVISION
MAXIMO ID: P041992
SUPERSEDES:
DRAWING NUMBER
P041992-05-00002_04

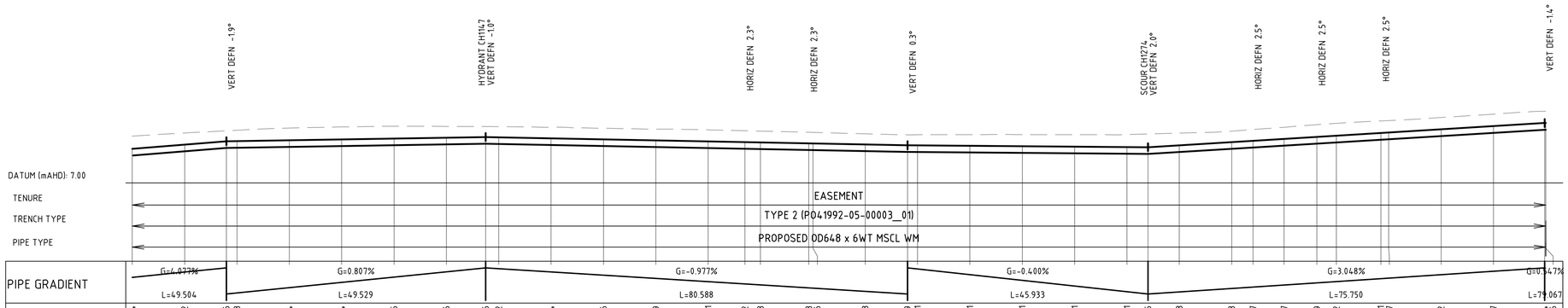

CHAINAGE (m)	DESIGN TOP (m AHD)	PIPE INVERT (m AHD)	EXISTING (m AHD)	PIPE COVER (m)
1080.000	10.254	9.612	11.449	1.215
1090.000	10.662	10.020	11.773	1.111
1097.961	10.986	10.345	11.986	1.000
1100.000	11.003	10.361	12.039	1.036
1110.000	11.084	10.442	12.241	1.157
1120.000	11.164	10.522	12.351	1.187
1130.000	11.245	10.603	12.414	1.169
1140.000	11.326	10.684	12.405	1.080
1147.490	11.386	10.744	12.386	1.000
1150.000	11.362	10.720	12.373	1.011
1160.000	11.264	10.622	12.309	1.045
1170.000	11.166	10.524	12.224	1.058
1180.000	11.069	10.427	12.141	1.072
1190.000	10.971	10.329	12.067	1.097
1197.019	10.902	10.260	11.987	1.084
1200.000	10.873	10.231	11.950	1.077
1209.219	10.783	10.141	11.836	1.053
1210.000	10.776	10.134	11.826	1.051
1220.000	10.678	10.036	11.697	1.019
1228.078	10.599	9.957	11.599	1.000
1230.000	10.591	9.949	11.602	1.010
1240.000	10.551	9.909	11.616	1.065
1250.000	10.511	9.869	11.622	1.111
1260.000	10.471	9.829	11.610	1.139
1270.000	10.431	9.789	11.623	1.192
1274.011	10.415	9.773	11.675	1.260
1280.000	10.598	9.956	11.753	1.156
1290.000	10.903	10.261	11.952	1.050
1294.083	11.027	10.385	12.103	1.076
1300.000	11.207	10.565	12.315	1.108
1306.283	11.399	10.757	12.568	1.169
1310.000	11.512	10.870	12.698	1.186
1318.483	11.771	11.129	12.932	1.161
1320.000	11.817	11.175	12.966	1.149
1330.000	12.122	11.480	13.248	1.126
1340.000	12.427	11.785	13.574	1.148
1349.761	12.724	12.082	13.854	1.130
1350.000	12.726	12.084	13.857	1.131

LONGITUDINAL PROFILE

HORIZONTAL SCALE 1 : 500

VERTICAL SCALE 1 : 250

NOTES

1. FOR GENERAL NOTES REFER DRAWING P041992-05-00001_02.
2. PROVIDE CATHODIC PROTECTION TO SA WATER TS0440 & DRAWINGS STD-04-00001_(10,13,14 and 17).
3. GEOTECHNICAL PROPERTIES ALONG BLUE FIN ROAD BH12 - BH15 (REF: A0012-0025-GEO-REP-10002)
- FILL GENERALLY ENCOUNTERED UP TO 0.2-0.8 mBGL.
- INFERRED LOW STRENGTH LIMESTONE ENCOUNTERED BELOW FILL LEVEL (FROM 0.2-0.8 mBGL).
- GROUNDWATER NOT ENCOUNTERED.
4. GEOTECHNICAL PROPERTIES ALONG PROPER BAY ROAD BH7 - BH11 (REF: A0012-0025-GEO-REP-10002)
- FILL GENERALLY ENCOUNTERED UP TO 0.5-0.8 mBGL.
- LOOSE TO MEDIUM DENSE SAND ENCOUNTERED BELOW FILL LEVEL (FROM 0.5-0.8 mBGL).
- GROUNDWATER NOT ENCOUNTERED.
5. GEOTECHNICAL PROPERTIES ALONG GREYHOUND ROAD BH1 - BH6 (REF: A0012-0025-GEO-REP-10002)
- FILL GENERALLY ENCOUNTERED UP TO 0.15-0.6 mBGL.
- VERY LOOSE AND LOOSE SAND ENCOUNTERED BELOW FILL LEVEL (FROM 0.15-0.6 mBGL).
- LOW LYING GROUND, SHALLOW GROUNDWATER ENCOUNTERED.
6. GEOTECHNICAL PROPERTIES ALONG EASEMENT TP01 - TP07 (REF: A0012-0025-GEO-REP-10002)
- FILL GENERALLY ENCOUNTERED UP TO 0.2-0.6 mBGL.
- INFERRED LOW STRENGTH LIMESTONE ENCOUNTERED BELOW FILL LEVEL (FROM 0.2-0.6 mBGL).
- NO GROUNDWATER ENCOUNTERED. GROUNDWATER LEVEL SUBJECT TO TIDAL MOVEMENTS.
7. REFER TYPICAL CROSS SECTION 'D' FOR PIPE IN SHARED SAPN EASEMENT (P041992-05-00003_08).

LEGEND

- NEW OD648 X 6WT MSCL SINTAJOINT TRANSFER MAIN
- DN600 ISOLATION VALVE REFER DRG P041992-05-00003_04
- HYDRANT
- SCOUR
- DN1200 SCOUR PIT REFER DRG P041992-05-00003_05
- THRUST BLOCK, REFER DETAIL SHEET P041992-05-00003_02
- E-UG — EX. UNDERGROUND ELECTRICAL
- E-OH — EX. OVERHEAD ELECTRICAL
- HVE-OH — EX. H/V OVERHEAD ELEC.
- HVE-UG — EX. H/V UNDERGROUND ELEC.
- T — EX. TELECOM
- S — EX. SEWER / WASTE PIPE
- W — EX. WATER MAIN
- SW — EX. STORMWATER
- DCDB BOUNDARY
- EX. RAILWAY CORRIDOR
- BOREHOLE LOCATION
- STOBIE POLE WITH 3m EXCLUSION ZONE
- EX. VEGETATION TO BE REMOVED
- E-OH — PROPOSED OVERHEAD ELECTRICAL (PRINCIPAL SUPPLIED)
- PROPOSED POWER POLE LOCATION
- PRINCIPAL SUPPLIED LAND PARCEL BOUNDARY (2x 15m WIDE EASEMENTS)
- CP — CATHODIC PROTECTION TEST POINT, REFER GENERAL NOTES SHEET P041992-05-00001_02
- TR1 — TRANSFORMER RECTIFIER FOR ICCP ANODE (CP)

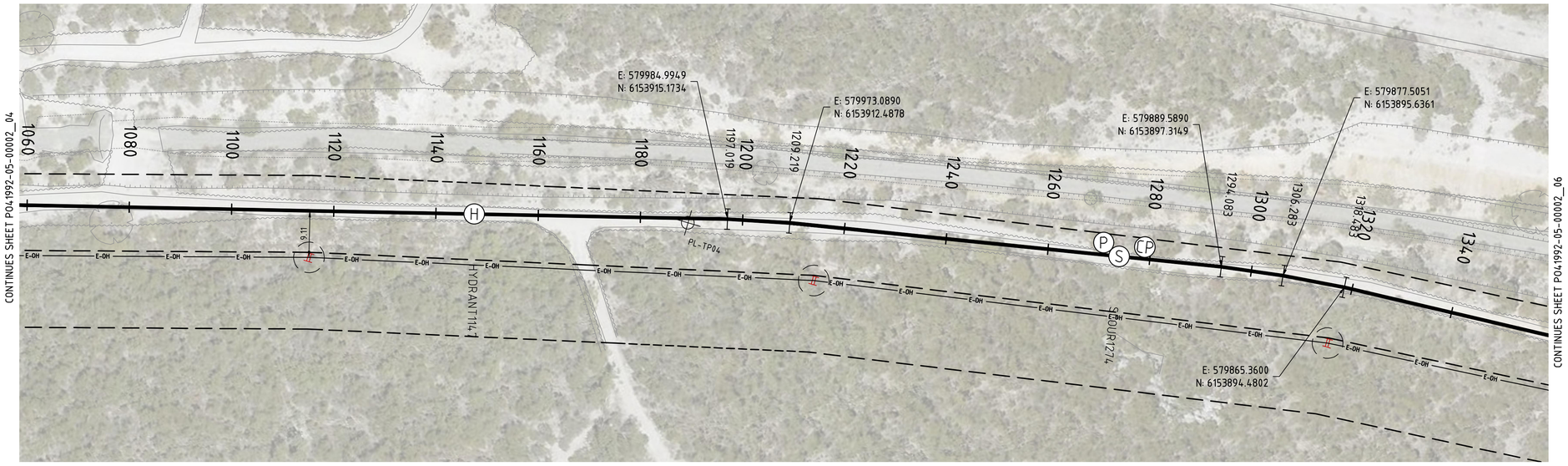

PLAN

SCALE 1:500

DIAL BEFORE YOU DIG
www.1100.com.au

WARNING
BEWARE OF OVERHEAD AND UNDERGROUND SERVICES

THE LOCATION OF OVERHEAD AND UNDERGROUND SERVICES ARE APPROXIMATE ONLY AND THEIR EXACT POSITION SHOULD BE PROVEN ON SITE
NO GUARANTEE IS GIVEN THAT ALL SERVICES ARE SHOWN
REFER TO ASSET OWNER FOR THEIR CLEARANCE AND APPROACH REQUIREMENTS

NOT FOR CONSTRUCTION

0 2.5 5 10 15 — 1:250 (A1); 1:500 (A3)
0 5 10 20 30 — 1:500 (A1); 1:1000 (A3)

REVISION PANEL

REV	DATE	DRN	DETAILS	APR'D
0.1D	13.10.23	CSS	60% DESIGN	SW
0.1C	08.09.23	CSS	60% DRAFT DESIGN FOR REVIEW	SW
0.1B	14.07.23	CSS	30% CONCEPT DESIGN	SW
0.1A	07.06.23	CSS	30% CONCEPT DESIGN - DRAFT FOR REVIEW	SW

CURRENT REV CONTRACTOR: TONKIN / WSP
CURRENT REV PROJECT: 220258

CURRENT REV AUTHORISED 13.10.23
J.TYLER
SIGNATURE

DESIGN PANEL

DESIGNED	13.10.23	AUTHORISED	13.10.23
P.SWINCER/L.HAYSMAN		J.TYLER	
DRAWN	13.10.23	SIGNATURE	
C.SUTCLIFFE			
REVIEWED	13.10.23		
S.WHICHELO			

CONTRACTOR: TONKIN / WSP

Government of South Australia
SA Water

This drawing is the property of the SOUTH AUSTRALIAN WATER CORPORATION and shall not be copied or modified in part or in whole without authorization.

EYRE PENINSULA DESALINATION PLANT

TREATED WATER TRANSFER PIPELINE NETWORK & RETICULATION

PLAN & LONGITUDINAL PROFILE CHN1080 - 1350

A1 SHT SIZE | TOTAL SHEETS: | PROJECT No: A0012-0025 | 0.1D REVISION

MAXIMO ID: P041992

SUPERSEDES:

DRAWING NUMBER
P041992-05-00002_05

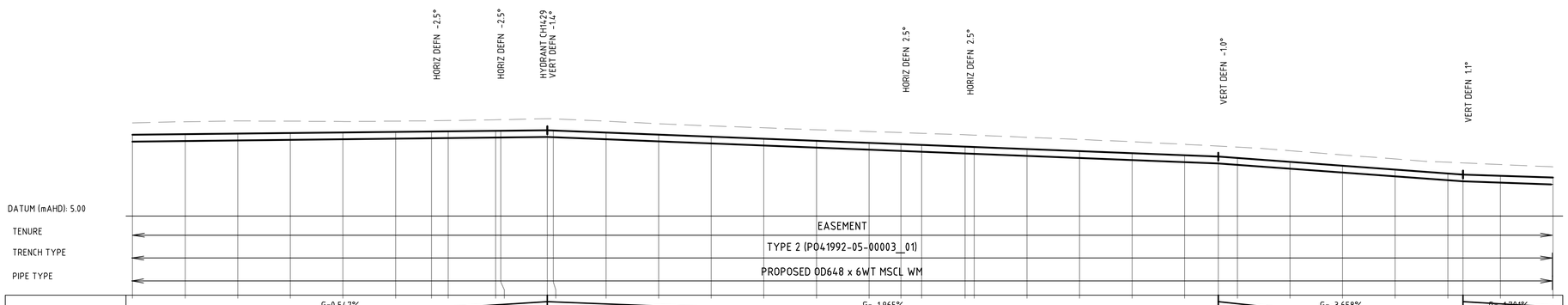
HORIZ DEFN -2.5°
HORIZ DEFN -2.5°
HYDRANT CH1429
VERT DEFN -1.4°
HORIZ DEFN 2.5°
HORIZ DEFN 2.5°
VERT DEFN -1.0°
VERT DEFN 1.1°
DATUM (mAHD): 5.00
TENURE
EASEMENT
TRENCH TYPE
TYPE 2 (P041992-05-00003_01)
PIPE TYPE
PROPOSED OD648 x 6WT MSCL WM

| | | |

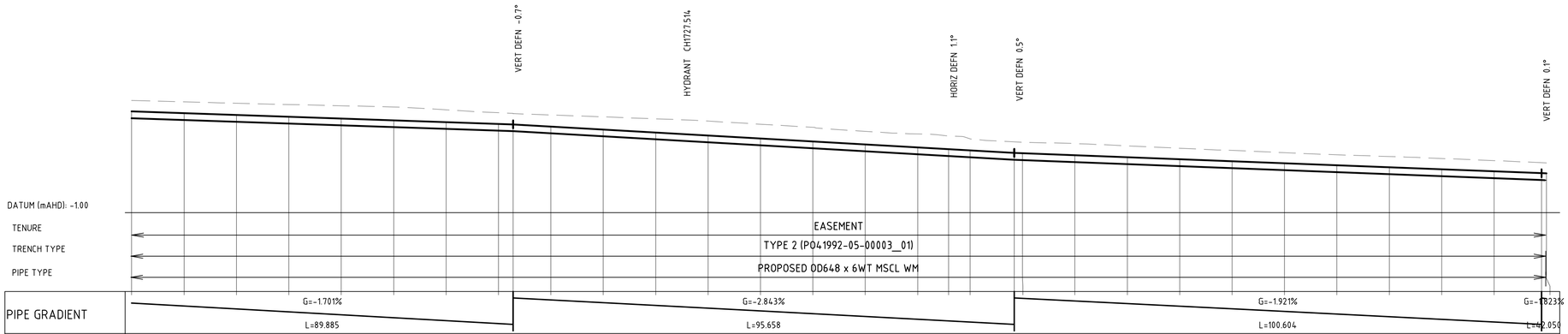

CHAINAGE (m)	DESIGN TOP (m AHD)	PIPE INVERT (m AHD)	EXISTING (m AHD)	PIPE COVER (m)
1620.000	8.657	8.015	9.690	1.033
1630.000	8.487	7.845	9.563	1.076
1640.000	8.317	7.675	9.435	1.118
1650.000	8.147	7.505	9.310	1.163
1660.000	7.976	7.334	9.194	1.218
1670.000	7.806	7.164	9.078	1.271
1680.000	7.636	6.994	8.806	1.170
1690.000	7.466	6.824	8.525	1.059
1692.780	7.419	6.777	8.467	1.048
1700.000	7.213	6.571	8.315	1.101
1710.000	6.929	6.287	8.132	1.203
1720.000	6.645	6.003	7.950	1.305
1730.000	6.360	5.718	7.733	1.373
1740.000	6.076	5.434	7.436	1.360
1750.000	5.792	5.150	7.138	1.347
1760.000	5.507	4.865	6.755	1.247
1770.000	5.223	4.581	6.506	1.283
1775.910	5.055	4.413	6.323	1.268
1780.000	4.939	4.297	6.035	1.097
1788.438	4.699	4.057	5.755	1.056
1790.000	4.669	4.027	5.714	1.045
1800.000	4.477	3.835	5.592	1.115
1810.000	4.285	3.643	5.376	1.092
1820.000	4.092	3.450	5.148	1.055
1830.000	3.900	3.258	4.941	1.041
1840.000	3.708	3.066	4.729	1.020
1850.000	3.516	2.874	4.524	1.008
1860.000	3.324	2.682	4.360	1.036
1870.000	3.132	2.490	4.173	1.041
1880.000	2.940	2.298	3.967	1.027
1889.041	2.766	2.124	3.779	1.013
1890.000	2.749	2.107	3.759	1.010

LONGITUDINAL PROFILE

HORIZONTAL SCALE 1 : 500
VERTICAL SCALE 1 : 250

NOTES

1. FOR GENERAL NOTES REFER DRAWING P041992-05-00001_02.
2. PROVIDE CATHODIC PROTECTION TO SA WATER TS0440 & DRAWINGS STD-04-00001_(10,13,14 and 17).
3. GEOTECHNICAL PROPERTIES ALONG BLUE FIN ROAD BH12 - BH15 (REF: A0012-0025-GEO-REP-10002)
- FILL GENERALLY ENCOUNTERED UP TO 0.2-0.8 mBGL.
- INFERRED LOW STRENGTH LIMESTONE ENCOUNTERED BELOW FILL LEVEL (FROM 0.2-0.8 mBGL).
- GROUNDWATER NOT ENCOUNTERED.
4. GEOTECHNICAL PROPERTIES ALONG PROPER BAY ROAD BH7 - BH11 (REF: A0012-0025-GEO-REP-10002)
- FILL GENERALLY ENCOUNTERED UP TO 0.5-0.8 mBGL.
- LOOSE TO MEDIUM DENSE SAND ENCOUNTERED BELOW FILL LEVEL (FROM 0.5-0.8 mBGL).
- GROUNDWATER NOT ENCOUNTERED.
5. GEOTECHNICAL PROPERTIES ALONG GREYHOUND ROAD BH1 - BH6 (REF: A0012-0025-GEO-REP-10002)
- FILL GENERALLY ENCOUNTERED UP TO 0.15-0.6 mBGL.
- VERY LOOSE AND LOOSE SAND ENCOUNTERED BELOW FILL LEVEL (FROM 0.15-0.6 mBGL).
- LOW LYING GROUND, SHALLOW GROUNDWATER ENCOUNTERED.
6. GEOTECHNICAL PROPERTIES ALONG EASEMENT TP01 - TP07 (REF: A0012-0025-GEO-REP-10002)
- FILL GENERALLY ENCOUNTERED UP TO 0.2-0.6 mBGL.
- INFERRED LOW STRENGTH LIMESTONE ENCOUNTERED BELOW FILL LEVEL (FROM 0.2-0.6 mBGL).
- NO GROUNDWATER ENCOUNTERED. GROUNDWATER LEVEL SUBJECT TO TIDAL MOVEMENTS.
7. REFER TYPICAL CROSS SECTION 'D' FOR PIPE IN SHARED SAPN EASEMENT (P041992-05-00003_08).

LEGEND

- NEW OD648 X 6WT MSCL SINTAJOINT TRANSFER MAIN
- DN600 ISOLATION VALVE REFER DRG P041992-05-00003_04
- HYDRANT
- SCOUR
- DN1200 SCOUR PIT REFER DRG P041992-05-00003_05
- THRUST BLOCK, REFER DETAIL SHEET P041992-05-00003_02
- E-UG — EX. UNDERGROUND ELECTRICAL
- E-OH — EX. OVERHEAD ELECTRICAL
- HVE-OH — EX. H/V OVERHEAD ELEC.
- HVE-UG — EX. H/V UNDERGROUND ELEC.
- T — EX. TELECOM
- S — EX. SEWER / WASTE PIPE
- W — EX. WATER MAIN
- SW — EX. STORMWATER
- DCDB BOUNDARY
- EX. RAILWAY CORRIDOR
- BOREHOLE LOCATION
- STOBIE POLE WITH 3m EXCLUSION ZONE
- EX. VEGETATION TO BE REMOVED
- E-OH — PROPOSED OVERHEAD ELECTRICAL (PRINCIPAL SUPPLIED)
- PROPOSED POWER POLE LOCATION
- PRINCIPAL SUPPLIED LAND PARCEL BOUNDARY (2x 15m WIDE EASEMENTS)
- CP — CATHODIC PROTECTION TEST POINT, REFER GENERAL NOTES SHEET P041992-05-00001_02
- TR1 — TRANSFORMER RECTIFIER FOR ICCP ANODE (CP)

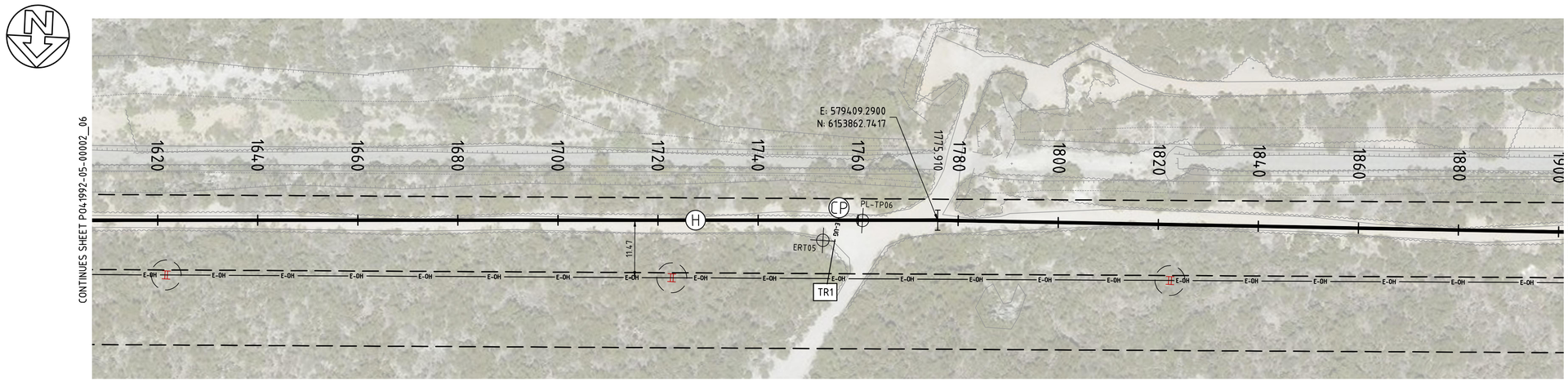

PLAN

SCALE 1:500

DIAL BEFORE YOU DIG
www.1100.com.au

WARNING
BEWARE OF OVERHEAD AND UNDERGROUND SERVICES

THE LOCATION OF OVERHEAD AND UNDERGROUND SERVICES ARE APPROXIMATE ONLY AND THEIR EXACT POSITION SHOULD BE PROVEN ON SITE
NO GUARANTEE IS GIVEN THAT ALL SERVICES ARE SHOWN REFER TO ASSET OWNER FOR THEIR CLEARANCE AND APPROACH REQUIREMENTS

NOT FOR CONSTRUCTION

REVISION PANEL

REV	DATE	DRN	DETAILS	APR'D
0.1D	13.10.23	CSS	60% DESIGN	SW
0.1C	08.09.23	CSS	60% DRAFT DESIGN FOR REVIEW	SW
0.1B	14.07.23	CSS	30% CONCEPT DESIGN	SW
0.1A	07.06.23	CSS	30% CONCEPT DESIGN - DRAFT FOR REVIEW	SW

CURRENT REV CONTRACTOR: TONKIN / WSP
CURRENT REV PROJECT: 220258

CURRENT REV AUTHORISED 13.10.23
J.TYLER
SIGNATURE

DESIGN PANEL

DESIGNED	13.10.23	AUTHORISED	13.10.23
P.SWINCER/L.HAYSMAN		J.TYLER	
DRAWN	13.10.23	SIGNATURE	
C.SUTCLIFFE			
REVIEWED	13.10.23		
S.WHICHELO			

CONTRACTOR: TONKIN / WSP

Government of South Australia
SA Water

This drawing is the property of the SOUTH AUSTRALIAN WATER CORPORATION and shall not be copied or modified in part or in whole without authorization.

EYRE PENINSULA DESALINATION PLANT

TREATED WATER TRANSFER PIPELINE NETWORK & RETICULATION

PLAN & LONGITUDINAL PROFILE CHN1620 - 1890

A1 SHT SIZE | TOTAL SHEETS: | PROJECT No: A0012-0025 | 0.1D REVISION

MAXIMO ID: P041992

SUPERSEDES:

DRAWING NUMBER
P041992-05-00002_07

1:250 (A1); 1:500 (A3)
1:500 (A1); 1:1000 (A3)

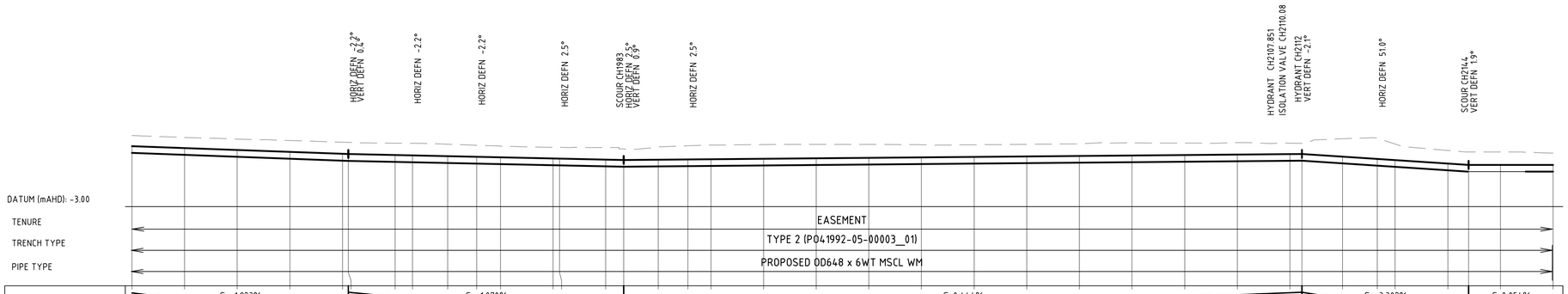
HORIZ DEFN -2.2°
VERT DEFN 0.4°
HORIZ DEFN -2.2°
HORIZ DEFN -2.2°
HORIZ DEFN 2.5°
SCOUR CH1983
HORIZ DEFN 2.5°
VERT DEFN 0.9°
HORIZ DEFN 2.5°
HYDRANT CH2107 851
ISOLATION VALVE CH2110.08
HYDRANT CH2112
VERT DEFN -2.1°
HORIZ DEFN 51.0°
SCOUR CH2144
VERT DEFN 1.9°
DATUM (mAHD): -3.00
TENURE
EASEMENT
TRENCH TYPE
TYPE 2 (P041992-05-00003_01)
PIPE TYPE
PROPOSED OD648 x 6WT MSCL WM

| | | |

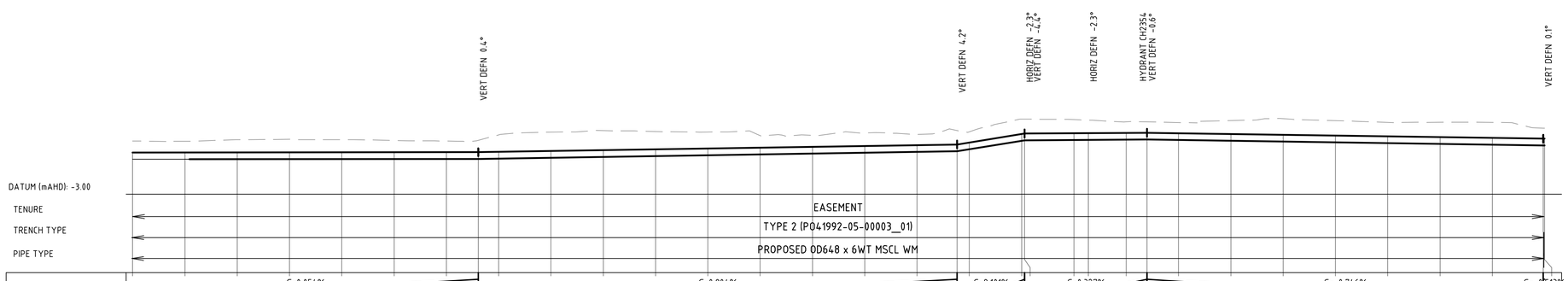

CHAINAGE (m)	DESIGN TOP (m AHD)	PIPE INVERT (m AHD)	EXISTING (m AHD)	PIPE COVER (m)
2160.000	0.976	0.334	2.088	1.112
2170.000	0.982	0.340	2.057	1.076
2180.000	0.987	0.345	2.199	1.212
2190.000	0.993	0.351	2.248	1.255
2200.000	0.998	0.356	2.269	1.211
2210.000	1.003	0.361	2.135	1.131
2220.000	1.009	0.367	2.078	1.069
2226.097	1.012	0.370	2.139	1.127
2230.000	1.044	0.402	2.670	1.627
2240.000	1.124	0.482	2.926	1.802
2250.000	1.204	0.562	3.071	1.867
2260.000	1.285	0.643	2.992	1.707
2270.000	1.365	0.723	2.935	1.570
2280.000	1.446	0.804	2.596	1.150
2290.000	1.526	0.884	2.607	1.081
2300.000	1.606	0.964	2.848	1.242
2310.000	1.687	1.045	2.714	1.028
2317.648	1.748	1.106	3.077	1.328
2320.000	1.939	1.297	2.963	1.024
2330.000	2.710	2.107	4.169	1.420
2330.566	2.795	2.193	4.167	1.372
2340.000	2.826	2.184	4.124	1.298
2342.766	2.835	2.193	4.072	1.238
2350.000	2.858	2.216	3.909	1.051
2353.916	2.871	2.229	3.913	1.041
2360.000	2.826	2.184	3.849	1.023
2370.000	2.752	2.110	4.030	1.278
2380.000	2.677	2.035	4.209	1.532
2390.000	2.602	1.960	4.023	1.421
2400.000	2.528	1.886	3.863	1.335
2410.000	2.453	1.811	3.868	1.415
2420.000	2.379	1.737	3.860	1.482
2429.736	2.306	1.664	3.306	1.000
2430.000	2.305	1.663	3.314	1.009

LONGITUDINAL PROFILE

HORIZONTAL SCALE 1 : 500
VERTICAL SCALE 1 : 250

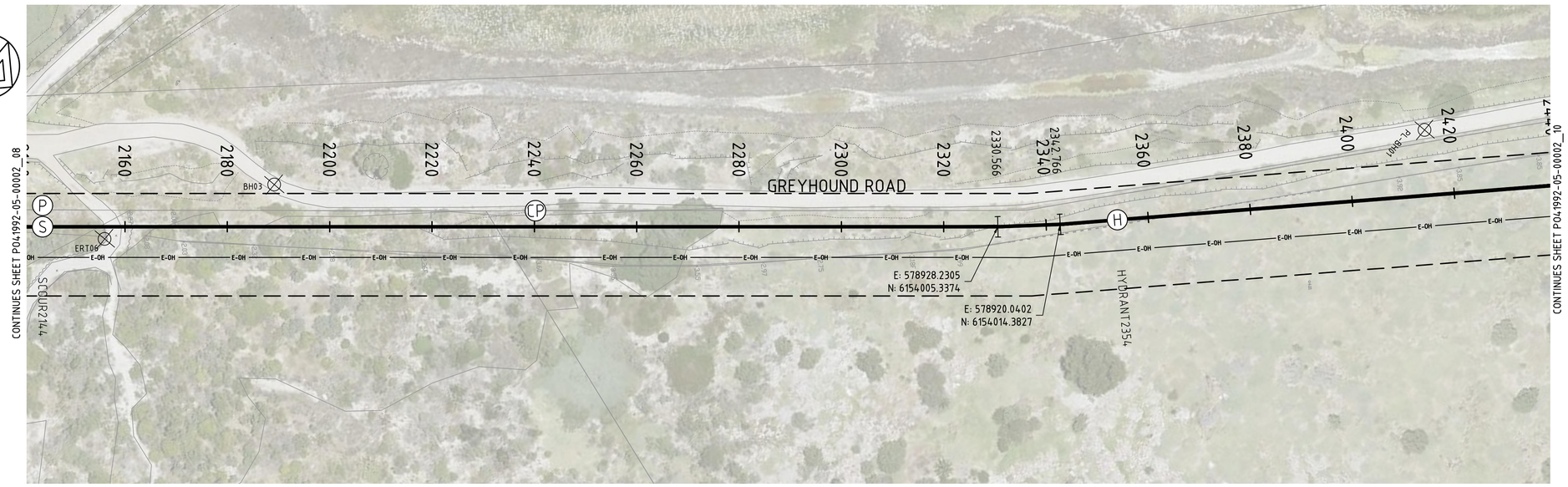

PLAN

SCALE 1:500

NOTES

1. FOR GENERAL NOTES REFER DRAWING P041992-05-00001_02.
2. PROVIDE CATHODIC PROTECTION TO SA WATER TS0440 & DRAWINGS STD-04-00001_(10,13,14 and 17).
3. GEOTECHNICAL PROPERTIES ALONG BLUE FIN ROAD BH12 - BH15 (REF: A0012-0025-GEO-REP-10002)
- FILL GENERALLY ENCOUNTERED UP TO 0.2-0.8 mBGL.
- INFERRED LOW STRENGTH LIMESTONE ENCOUNTERED BELOW FILL LEVEL (FROM 0.2-0.8 mBGL).
- GROUNDWATER NOT ENCOUNTERED.
4. GEOTECHNICAL PROPERTIES ALONG PROPER BAY ROAD BH7 - BH11 (REF: A0012-0025-GEO-REP-10002)
- FILL GENERALLY ENCOUNTERED UP TO 0.5-0.8 mBGL.
- LOOSE TO MEDIUM DENSE SAND ENCOUNTERED BELOW FILL LEVEL (FROM 0.5-0.8 mBGL).
- GROUNDWATER NOT ENCOUNTERED.
5. GEOTECHNICAL PROPERTIES ALONG GREYHOUND ROAD BH1 - BH6 (REF: A0012-0025-GEO-REP-10002)
- FILL GENERALLY ENCOUNTERED UP TO 0.15-0.6 mBGL.
- VERY LOOSE AND LOOSE SAND ENCOUNTERED BELOW FILL LEVEL (FROM 0.15-0.6 mBGL).
- LOW LYING GROUND, SHALLOW GROUNDWATER ENCOUNTERED.
6. GEOTECHNICAL PROPERTIES ALONG EASEMENT TP01 - TP07 (REF: A0012-0025-GEO-REP-10002)
- FILL GENERALLY ENCOUNTERED UP TO 0.2-0.6 mBGL.
- INFERRED LOW STRENGTH LIMESTONE ENCOUNTERED BELOW FILL LEVEL (FROM 0.2-0.6 mBGL).
- NO GROUNDWATER ENCOUNTERED. GROUNDWATER LEVEL SUBJECT TO TIDAL MOVEMENTS.
7. REFER TYPICAL CROSS SECTION 'D' FOR PIPE IN SHARED SAPN EASEMENT (P041992-05-00003_08).

LEGEND

- NEW OD648 X 6WT MSCL SINTAJOINT TRANSFER MAIN
- DN600 ISOLATION VALVE REFER DRG P041992-05-00003_04
- HYDRANT
- SCOUR
- DN1200 SCOUR PIT REFER DRG P041992-05-00003_05
- THRUST BLOCK, REFER DETAIL SHEET P041992-05-00003_02
- E-UG — EX. UNDERGROUND ELECTRICAL
- E-OH — EX. OVERHEAD ELECTRICAL
- HVE-OH — EX. H/V OVERHEAD ELEC.
- HVE-UG — EX. H/V UNDERGROUND ELEC.
- T — EX. TELECOM
- S — EX. SEWER / WASTE PIPE
- W — EX. WATER MAIN
- SW — EX. STORMWATER
- DCDB BOUNDARY
- EX. RAILWAY CORRIDOR
- BOREHOLE LOCATION
- STOBIE POLE WITH 3m EXCLUSION ZONE
- EX. VEGETATION TO BE REMOVED
- E-OH — PROPOSED OVERHEAD ELECTRICAL (PRINCIPAL SUPPLIED)
- PROPOSED POWER POLE LOCATION
- PRINCIPAL SUPPLIED LAND PARCEL BOUNDARY (2x 15m WIDE EASEMENTS)
- CP — CATHODIC PROTECTION TEST POINT, REFER GENERAL NOTES SHEET P041992-05-00001_02
- TR1 — TRANSFORMER RECTIFIER FOR ICCP ANODE (CP)

DIAL BEFORE YOU DIG
www.1100.com.au

WARNING
BEWARE OF OVERHEAD AND UNDERGROUND SERVICES

THE LOCATION OF OVERHEAD AND UNDERGROUND SERVICES ARE APPROXIMATE ONLY AND THEIR EXACT POSITION SHOULD BE PROVEN ON SITE
NO GUARANTEE IS GIVEN THAT ALL SERVICES ARE SHOWN
REFER TO ASSET OWNER FOR THEIR CLEARANCE AND APPROACH REQUIREMENTS

NOT FOR CONSTRUCTION

0 2.5 5 10 15 — 1:250 (A1); 1:500 (A3)
0 5 10 20 30 — 1:500 (A1); 1:1000 (A3)

REVISION PANEL

REV	DATE	DRN	DETAILS	APR'D
0.1D	13.10.23	CSS	60% DESIGN	SW
0.1C	08.09.23	CSS	60% DRAFT DESIGN FOR REVIEW	SW
0.1B	14.07.23	CSS	30% CONCEPT DESIGN	SW
0.1A	07.06.23	CSS	30% CONCEPT DESIGN - DRAFT FOR REVIEW	SW

CURRENT REV CONTRACTOR: TONKIN / WSP
CURRENT REV PROJECT: 220258

CURRENT REV AUTHORISED 13.10.23
J.TYLER
SIGNATURE

DESIGN PANEL

DESIGNED	13.10.23	AUTHORISED	13.10.23
P.SWINCER/L.HAYSMAN		J.TYLER	
DRAWN	13.10.23	SIGNATURE	
C.SUTCLIFFE			
REVIEWED	13.10.23		
S.WHICHELO			

CONTRACTOR: TONKIN / WSP

Government of South Australia
SA Water

This drawing is the property of the SOUTH AUSTRALIAN WATER CORPORATION and shall not be copied or modified in part or in whole without authorization.

EYRE PENINSULA DESALINATION PLANT

TREATED WATER TRANSFER PIPELINE NETWORK & RETICULATION

PLAN & LONGITUDINAL PROFILE CHN2160 - 2430

A1 SHT SIZE | TOTAL SHEETS: | PROJECT No: A0012-0025 | 0.1D REVISION
MAXIMO ID: P041992
SUPERSEDES:
DRAWING NUMBER
P041992-05-00002_09

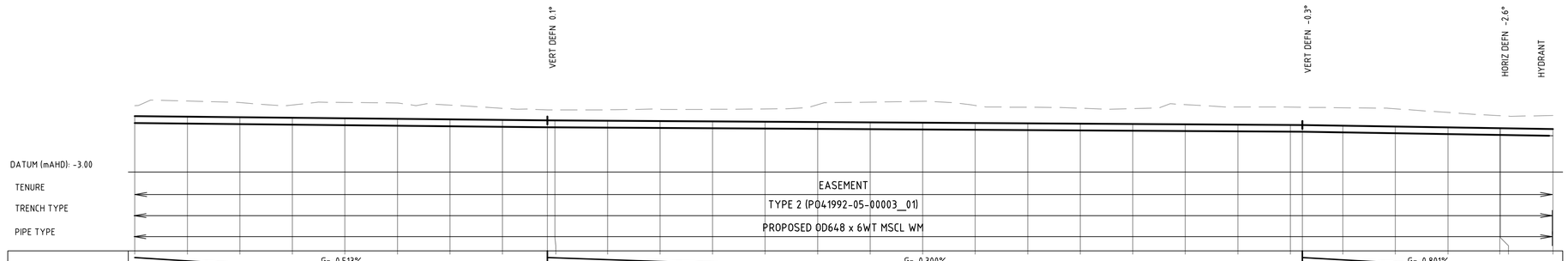

CHAINAGE (m)	DESIGN TOP (m AHD)	PIPE INVERT (m AHD)	EXISTING (m AHD)	PIPE COVER (m)
2430.000	2.305	1.663	3.314	1.009
2440.000	2.253	1.611	3.741	1.488
2450.000	2.202	1.560	3.599	1.397
2460.000	2.151	1.509	3.366	1.216
2470.000	2.099	1.457	3.615	1.515
2480.000	2.048	1.406	3.567	1.520
2490.000	1.997	1.355	3.358	1.361
2500.000	1.945	1.303	3.059	1.114
2508.530	1.901	1.259	2.901	1.000
2510.000	1.897	1.255	2.903	1.006
2520.000	1.867	1.225	2.915	1.048
2530.000	1.837	1.195	2.989	1.152
2540.000	1.807	1.165	2.958	1.151
2550.000	1.777	1.135	2.991	1.215
2560.000	1.747	1.105	3.397	1.650
2570.000	1.717	1.075	3.644	1.927
2580.000	1.687	1.045	3.717	2.030
2590.000	1.657	1.015	3.329	1.672
2600.000	1.627	0.985	3.157	1.530
2610.000	1.597	0.955	3.061	1.464
2620.000	1.567	0.925	3.021	1.454
2630.000	1.537	0.895	3.410	1.873
2640.000	1.507	0.865	3.181	1.674
2650.000	1.477	0.835	3.163	1.686
2652.311	1.470	0.828	3.151	1.681
2660.000	1.408	0.766	3.111	1.702
2670.000	1.328	0.686	3.008	1.680
2680.000	1.248	0.606	2.660	1.412
2689.882	1.169	0.527	2.350	1.181
2690.000	1.168	0.526	2.348	1.180
2700.000	1.088	0.446	2.372	1.284

LONGITUDINAL PROFILE

HORIZONTAL SCALE 1 : 500
VERTICAL SCALE 1 : 250

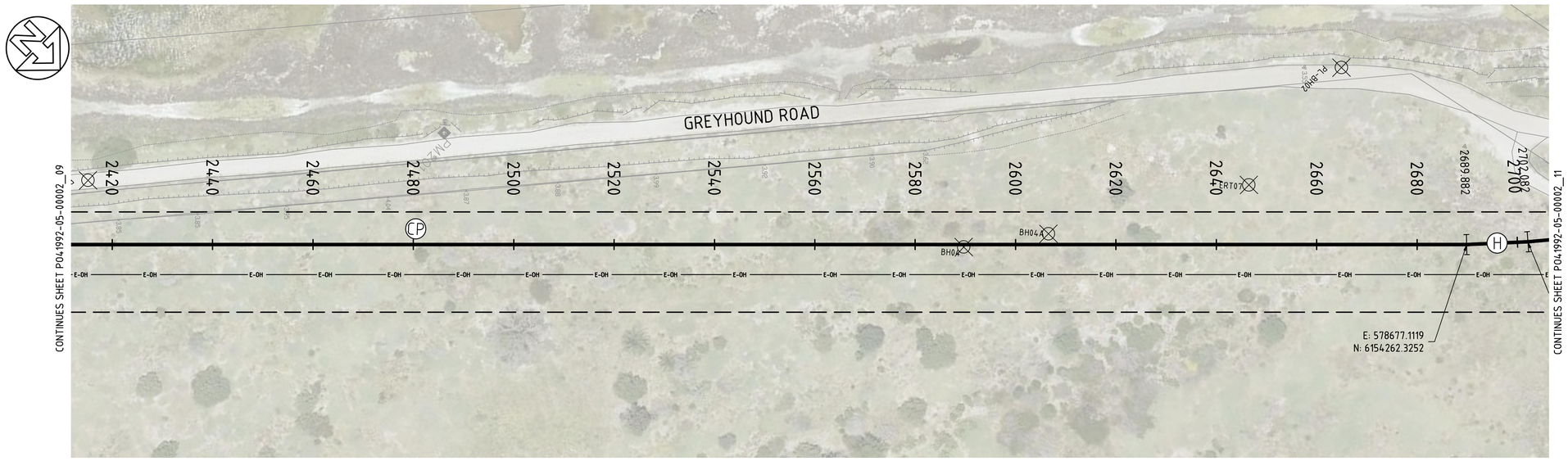

PLAN

SCALE 1:500

NOTES

1. FOR GENERAL NOTES REFER DRAWING P041992-05-00001_02.
2. PROVIDE CATHODIC PROTECTION TO SA WATER TS0440 & DRAWINGS STD-04-00001_(10,13,14 and 17).
3. GEOTECHNICAL PROPERTIES ALONG BLUE FIN ROAD BH12 - BH15 (REF: A0012-0025-GEO-REP-10002)
- FILL GENERALLY ENCOUNTERED UP TO 0.2-0.8 mBGL.
- INFERRED LOW STRENGTH LIMESTONE ENCOUNTERED BELOW FILL LEVEL (FROM 0.2-0.8 mBGL).
- GROUNDWATER NOT ENCOUNTERED.
4. GEOTECHNICAL PROPERTIES ALONG PROPER BAY ROAD BH7 - BH11 (REF: A0012-0025-GEO-REP-10002)
- FILL GENERALLY ENCOUNTERED UP TO 0.5-0.8 mBGL.
- LOOSE TO MEDIUM DENSE SAND ENCOUNTERED BELOW FILL LEVEL (FROM 0.5-0.8 mBGL).
- GROUNDWATER NOT ENCOUNTERED.
5. GEOTECHNICAL PROPERTIES ALONG GREYHOUND ROAD BH1 - BH6 (REF: A0012-0025-GEO-REP-10002)
- FILL GENERALLY ENCOUNTERED UP TO 0.15-0.6 mBGL.
- VERY LOOSE AND LOOSE SAND ENCOUNTERED BELOW FILL LEVEL (FROM 0.15-0.6 mBGL).
- LOW LYING GROUND, SHALLOW GROUNDWATER ENCOUNTERED.
6. GEOTECHNICAL PROPERTIES ALONG EASEMENT TP01 - TP07 (REF: A0012-0025-GEO-REP-10002)
- FILL GENERALLY ENCOUNTERED UP TO 0.2-0.6 mBGL.
- INFERRED LOW STRENGTH LIMESTONE ENCOUNTERED BELOW FILL LEVEL (FROM 0.2-0.6 mBGL).
- NO GROUNDWATER ENCOUNTERED. GROUNDWATER LEVEL SUBJECT TO TIDAL MOVEMENTS.
7. REFER TYPICAL CROSS SECTION 'D' FOR PIPE IN SHARED SAPN EASEMENT (P041992-05-00003_08).

LEGEND

- NEW OD648 X 6WT MSCL SINTAJOINT TRANSFER MAIN
- DN600 ISOLATION VALVE REFER DRG P041992-05-00003_04
- HYDRANT
- SCOUR
- DN1200 SCOUR PIT REFER DRG P041992-05-00003_05
- THRUST BLOCK, REFER DETAIL SHEET P041992-05-00003_02
- E-UG — EX. UNDERGROUND ELECTRICAL
- E-OH — EX. OVERHEAD ELECTRICAL
- HVE-OH — EX. H/V OVERHEAD ELEC.
- HVE-UG — EX. H/V UNDERGROUND ELEC.
- T — EX. TELECOM
- S — EX. SEWER / WASTE PIPE
- W — EX. WATER MAIN
- SW — EX. STORMWATER
- DCDB BOUNDARY
- EX. RAILWAY CORRIDOR
- BOREHOLE LOCATION
- STOBIE POLE WITH 3m EXCLUSION ZONE
- EX. VEGETATION TO BE REMOVED
- E-OH — PROPOSED OVERHEAD ELECTRICAL (PRINCIPAL SUPPLIED)
- PROPOSED POWER POLE LOCATION
- PRINCIPAL SUPPLIED LAND PARCEL BOUNDARY (2x 15m WIDE EASEMENTS)
- CP — CATHODIC PROTECTION TEST POINT, REFER GENERAL NOTES SHEET P041992-05-00001_02
- TR1 — TRANSFORMER RECTIFIER FOR ICCP ANODE (CP)

DIAL BEFORE YOU DIG
www.1100.com.au

WARNING
BEWARE OF OVERHEAD AND UNDERGROUND SERVICES

THE LOCATION OF OVERHEAD AND UNDERGROUND SERVICES ARE APPROXIMATE ONLY AND THEIR EXACT POSITION SHOULD BE PROVEN ON SITE
NO GUARANTEE IS GIVEN THAT ALL SERVICES ARE SHOWN REFER TO ASSET OWNER FOR THEIR CLEARANCE AND APPROACH REQUIREMENTS

NOT FOR CONSTRUCTION

0 2.5 5 10 15
1:250 (A1); 1:500 (A3)
0 5 10 20 30
1:500 (A1); 1:1000 (A3)

REVISION PANEL

REV	DATE	DRN	DETAILS	APR'D
0.1D	13.10.23	CSS	60% DESIGN	SW
0.1C	08.09.23	CSS	60% DRAFT DESIGN FOR REVIEW	SW
0.1B	14.07.23	CSS	30% CONCEPT DESIGN	SW
0.1A	07.06.23	CSS	30% CONCEPT DESIGN - DRAFT FOR REVIEW	SW

CURRENT REV CONTRACTOR: TONKIN / WSP
CURRENT REV PROJECT: 220258

CURRENT REV AUTHORISED 13.10.23
J.TYLER
SIGNATURE

DESIGN PANEL

DESIGNED	13.10.23	AUTHORISED	13.10.23
P.SWINCER/L.HAYSMAN		J.TYLER	
DRAWN	13.10.23	SIGNATURE	
C.SUTCLIFFE			
REVIEWED	13.10.23		
S.WHICHELO			

CONTRACTOR: TONKIN / WSP

Government of South Australia
SA Water

This drawing is the property of the SOUTH AUSTRALIAN WATER CORPORATION and shall not be copied or modified in part or in whole without authorization.

EYRE PENINSULA DESALINATION PLANT

TREATED WATER TRANSFER PIPELINE NETWORK & RETICULATION

PLAN & LONGITUDINAL PROFILE CHN2430 - 2700

A1 SHT SIZE
TOTAL SHEETS:
PROJECT No: A0012-0025
0.1D REVISION
MAXIMO ID: P041992
SUPERSEDES:
DRAWING NUMBER
P041992-05-00002_10

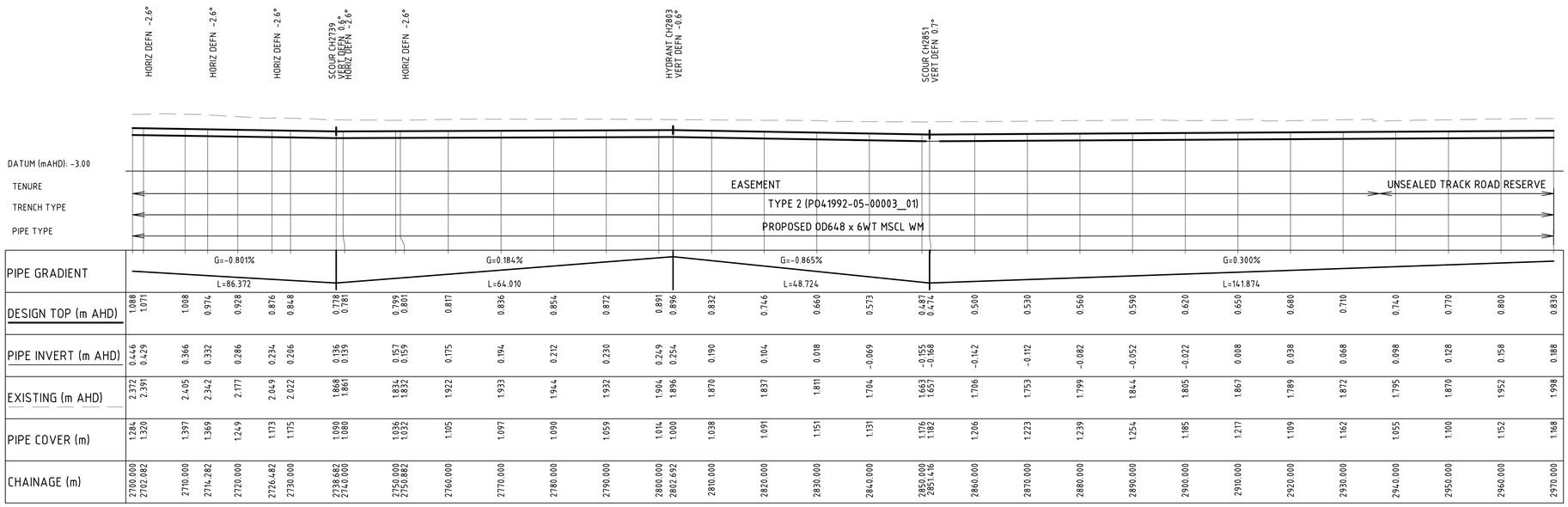

LONGITUDINAL PROFILE

HORIZONTAL SCALE 1 : 500

VERTICAL SCALE 1 : 250

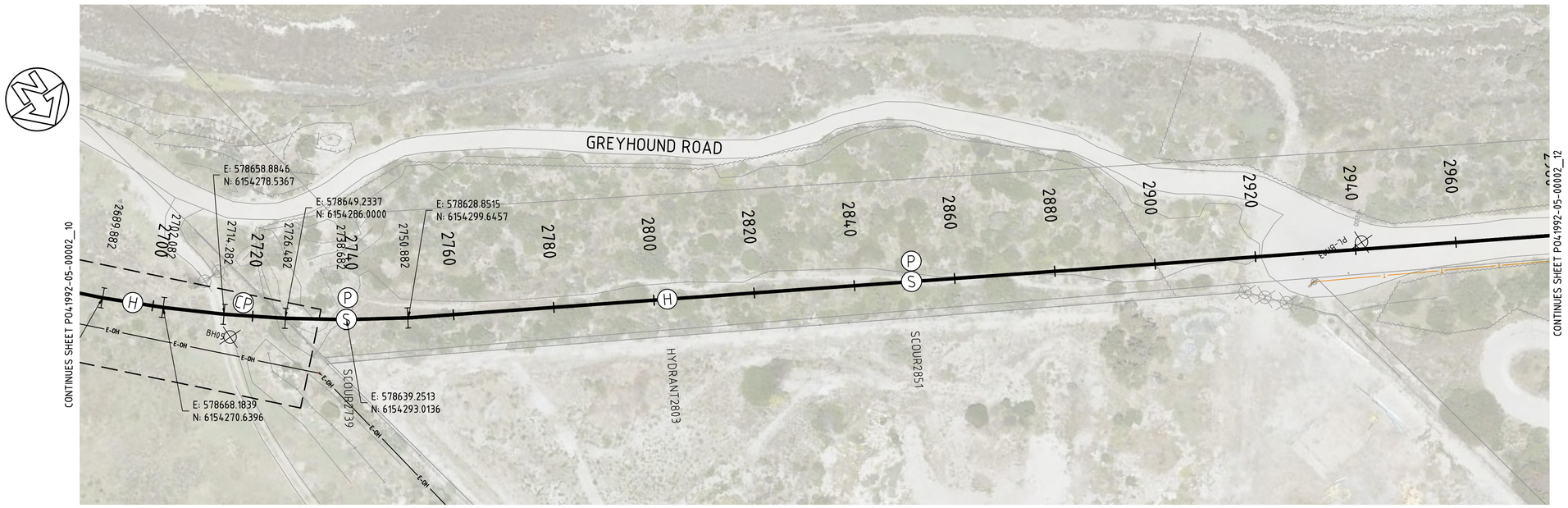

PLAN

SCALE 1:500

NOTES

1. FOR GENERAL NOTES REFER DRAWING P041992-05-00001_02.
2. PROVIDE CATHODIC PROTECTION TO SA WATER TS0440 & DRAWINGS STD-04-00001_(10,13,14 and 17).
3. GEOTECHNICAL PROPERTIES ALONG BLUE FIN ROAD BH12 - BH15 (REF: A0012-0025-GEO-REP-10002)
- FILL GENERALLY ENCOUNTERED UP TO 0.2-0.8 mBGL.
- INFERRED LOW STRENGTH LIMESTONE ENCOUNTERED BELOW FILL LEVEL (FROM 0.2-0.8 mBGL).
- GROUNDWATER NOT ENCOUNTERED.
4. GEOTECHNICAL PROPERTIES ALONG PROPER BAY ROAD BH7 - BH11 (REF: A0012-0025-GEO-REP-10002)
- FILL GENERALLY ENCOUNTERED UP TO 0.5-0.8 mBGL.
- LOOSE TO MEDIUM DENSE SAND ENCOUNTERED BELOW FILL LEVEL (FROM 0.5-0.8 mBGL).
- GROUNDWATER NOT ENCOUNTERED.
5. GEOTECHNICAL PROPERTIES ALONG GREYHOUND ROAD BH1 - BH6 (REF: A0012-0025-GEO-REP-10002)
- FILL GENERALLY ENCOUNTERED UP TO 0.15-0.6 mBGL.
- VERY LOOSE AND LOOSE SAND ENCOUNTERED BELOW FILL LEVEL (FROM 0.15-0.6 mBGL).
- LOW LYING GROUND, SHALLOW GROUNDWATER ENCOUNTERED.
6. GEOTECHNICAL PROPERTIES ALONG EASEMENT TP01 - TP07 (REF: A0012-0025-GEO-REP-10002)
- FILL GENERALLY ENCOUNTERED UP TO 0.2-0.6 mBGL.
- INFERRED LOW STRENGTH LIMESTONE ENCOUNTERED BELOW FILL LEVEL (FROM 0.2-0.6 mBGL).
- NO GROUNDWATER ENCOUNTERED. GROUNDWATER LEVEL SUBJECT TO TIDAL MOVEMENTS.
7. REFER TYPICAL CROSS SECTION 'D' FOR PIPE IN SHARED SAPN EASEMENT (P041992-05-00003_08).

LEGEND

- NEW OD648 X 6WT MSCL SINTAJOINT TRANSFER MAIN
- DN600 ISOLATION VALVE REFER DRG P041992-05-00003_04
- HYDRANT
- SCOUR
- DN1200 SCOUR PIT REFER DRG P041992-05-00003_05
- THRUST BLOCK, REFER DETAIL SHEET P041992-05-00003_02
- E-UG — EX. UNDERGROUND ELECTRICAL
- E-OH — EX. OVERHEAD ELECTRICAL
- HVE-OH — EX. H/V OVERHEAD ELEC.
- HVE-UG — EX. H/V UNDERGROUND ELEC.
- T — EX. TELECOM
- S — EX. SEWER / WASTE PIPE
- W — EX. WATER MAIN
- SW — EX. STORMWATER
- DCDB BOUNDARY
- EX. RAILWAY CORRIDOR
- BOREHOLE LOCATION
- STOBIE POLE WITH 3m EXCLUSION ZONE
- EX. VEGETATION TO BE REMOVED
- E-OH — PROPOSED OVERHEAD ELECTRICAL (PRINCIPAL SUPPLIED)
- PROPOSED POWER POLE LOCATION
- PRINCIPAL SUPPLIED LAND PARCEL BOUNDARY (2x 15m WIDE EASEMENTS)
- CP — CATHODIC PROTECTION TEST POINT, REFER GENERAL NOTES SHEET P041992-05-00001_02
- TR1 — TRANSFORMER RECTIFIER FOR ICCP ANODE (CP)

DIAL BEFORE YOU DIG
www.1100.com.au

WARNING
BEWARE OF OVERHEAD AND UNDERGROUND SERVICES
THE LOCATION OF OVERHEAD AND UNDERGROUND SERVICES ARE APPROXIMATE ONLY AND THEIR EXACT POSITION SHOULD BE PROVEN ON SITE
NO GUARANTEE IS GIVEN THAT ALL SERVICES ARE SHOWN
REFER TO ASSET OWNER FOR THEIR CLEARANCE AND APPROACH REQUIREMENTS

NOT FOR CONSTRUCTION

0 2.5 5 10 15 — 1:250 (A1); 1:500 (A3)

0 5 10 20 30 — 1:500 (A1); 1:1000 (A3)

REVISION PANEL

REV	DATE	DRN	DETAILS	APR'D
0.1D	13.10.23	CSS	60% DESIGN	SW
0.1C	08.09.23	CSS	60% DRAFT DESIGN FOR REVIEW	SW
0.1B	14.07.23	CSS	30% CONCEPT DESIGN	SW
0.1A	07.06.23	CSS	30% CONCEPT DESIGN - DRAFT FOR REVIEW	SW

CURRENT REV CONTRACTOR: TONKIN / WSP — CURRENT REV PROJECT: 220258

CURRENT REV AUTHORISED 13.10.23 — J.TYLER — SIGNATURE

DESIGN PANEL

DESIGNED	13.10.23	AUTHORISED	13.10.23
P.SWINCER/L.HAYSMAN		J.TYLER	
DRAWN	13.10.23	SIGNATURE	
C.SUTCLIFFE			
REVIEWED	13.10.23		
S.WHICHELO			

CONTRACTOR: TONKIN / WSP

Government of South Australia — SA Water

This drawing is the property of the SOUTH AUSTRALIAN WATER CORPORATION and shall not be copied or modified in part or in whole without authorization.

EYRE PENINSULA DESALINATION PLANT

TREATED WATER TRANSFER PIPELINE NETWORK & RETICULATION

PLAN & LONGITUDINAL PROFILE CHN2700 - 2970

A1 SHT SIZE — TOTAL SHEETS: — PROJECT No: A0012-0025 — 0.1D REVISION

MAXIMO ID: P041992

SUPERSEDES:

DRAWING NUMBER P041992-05-00002_11

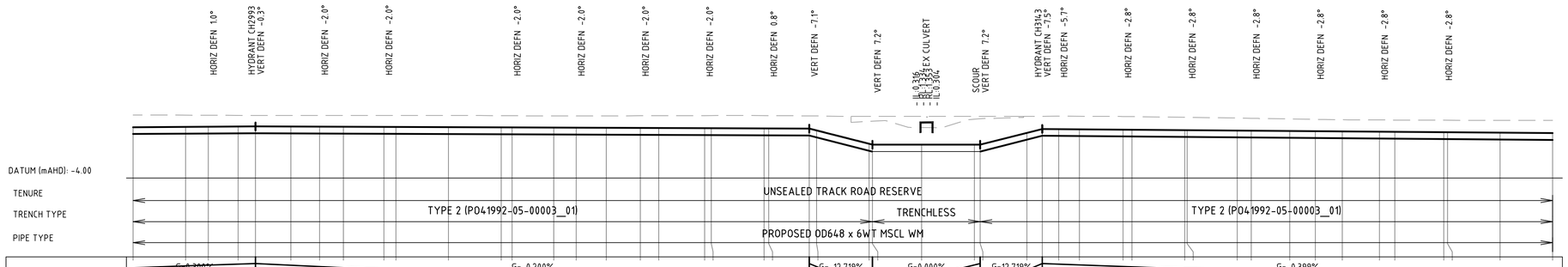

CHAINAGE (m)	PIPE COVER (m)	EXISTING (m AHD)	PIPE INVERT (m AHD)	DESIGN TOP (m AHD)
2970.000	1.168	1.998	0.188	0.830
2980.000	1.116	1.977	0.218	0.860
2984.321	1.097	1.970	0.231	0.873
2990.000	1.067	1.957	0.248	0.890
2993.290	1.051	1.951	0.258	0.900
3000.000	1.061	1.947	0.244	0.886
3005.490	1.076	1.951	0.233	0.875
3010.000	1.088	1.954	0.224	0.866
3017.690	1.097	1.948	0.209	0.851
3020.000	1.101	1.947	0.204	0.846
3030.000	1.118	1.944	0.184	0.826
3040.000	1.120	1.927	0.164	0.806
3042.090	1.119	1.921	0.160	0.802
3050.000	1.117	1.903	0.144	0.786
3054.290	1.126	1.903	0.136	0.778
3060.000	1.137	1.903	0.124	0.766
3066.491	1.162	1.915	0.111	0.753
3070.000	1.176	1.922	0.104	0.746
3078.691	1.202	1.931	0.087	0.729
3080.000	1.208	1.934	0.084	0.726
3090.000	1.230	1.937	0.064	0.706
3090.891	1.230	1.935	0.063	0.705
3098.618	1.215	1.904	0.047	0.689
3100.000	1.383	1.896	-0.129	0.513
3110.000	2.143	1.385	-1.400	-0.758
3110.608	2.237	1.402	-1.478	-0.836
3120.000	1.632	0.796	-1.478	-0.836
3130.000	2.425	1.589	-1.478	-0.836
3131.113	2.481	1.645	-1.478	-0.836
3140.000	1.567	1.861	-0.348	0.294
3142.895	1.204	1.868	0.022	0.664
3146.078	1.224	1.875	0.009	0.651
3150.000	1.234	1.869	-0.006	0.636
3158.278	1.246	1.849	-0.039	0.603
3160.000	1.240	1.836	-0.046	0.596
3170.000	1.218	1.774	-0.086	0.556
3170.478	1.217	1.771	-0.088	0.556
3180.000	1.183	1.699	-0.126	0.516
3182.678	1.171	1.676	-0.137	0.505
3190.000	1.139	1.615	-0.166	0.476
3194.878	1.123	1.579	-0.186	0.456
3200.000	1.103	1.539	-0.206	0.436
3207.078	1.108	1.516	-0.234	0.408
3210.000	1.111	1.507	-0.246	0.396
3219.278	1.133	1.492	-0.283	0.359
3220.000	1.135	1.491	-0.286	0.356
3230.000	1.162	1.478	-0.326	0.316
3240.000	1.206	1.482	-0.366	0.276

LONGITUDINAL PROFILE

HORIZONTAL SCALE 1 : 500
VERTICAL SCALE 1 : 250

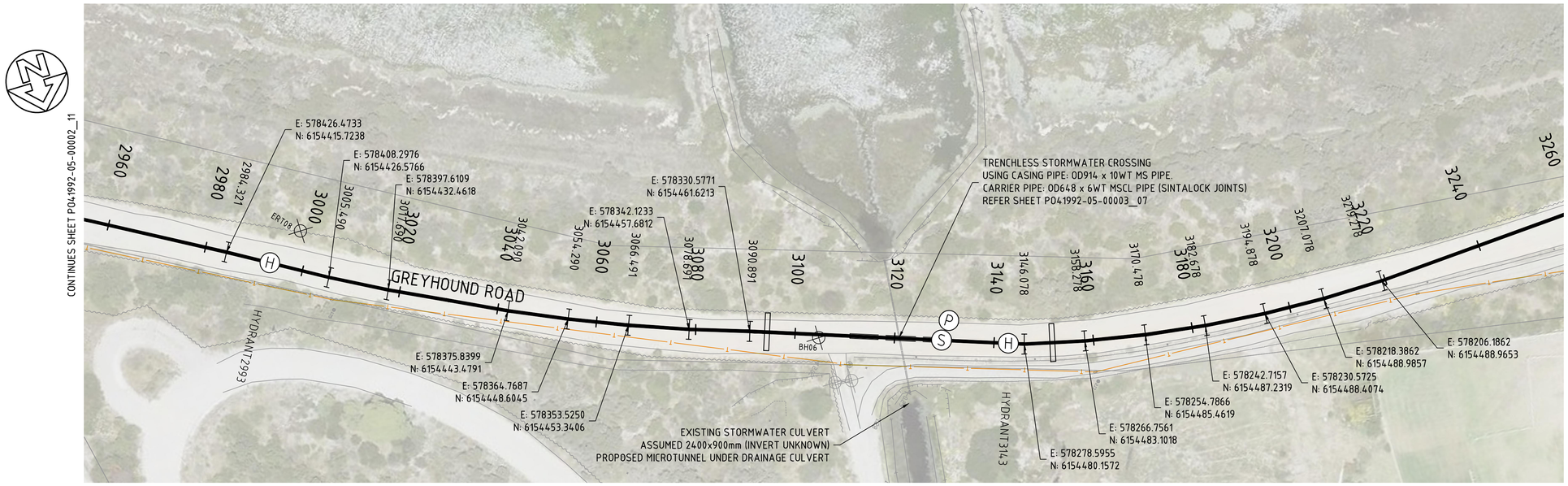

PLAN

SCALE 1:500

NOTES

1. FOR GENERAL NOTES REFER DRAWING P041992-05-00001_02.
2. PROVIDE CATHODIC PROTECTION TO SA WATER TS0440 & DRAWINGS STD-04-00001_(10,13,14 and 17).
3. GEOTECHNICAL PROPERTIES ALONG BLUE FIN ROAD BH12 - BH15 (REF: A0012-0025-GEO-REP-10002)
- FILL GENERALLY ENCOUNTERED UP TO 0.2-0.8 mBGL.
- INFERRED LOW STRENGTH LIMESTONE ENCOUNTERED BELOW FILL LEVEL (FROM 0.2-0.8 mBGL).
- GROUNDWATER NOT ENCOUNTERED.
4. GEOTECHNICAL PROPERTIES ALONG PROPER BAY ROAD BH7 - BH11 (REF: A0012-0025-GEO-REP-10002)
- FILL GENERALLY ENCOUNTERED UP TO 0.5-0.8 mBGL.
- LOOSE TO MEDIUM DENSE SAND ENCOUNTERED BELOW FILL LEVEL (FROM 0.5-0.8 mBGL).
- GROUNDWATER NOT ENCOUNTERED.
5. GEOTECHNICAL PROPERTIES ALONG GREYHOUND ROAD BH1 - BH6 (REF: A0012-0025-GEO-REP-10002)
- FILL GENERALLY ENCOUNTERED UP TO 0.15-0.6 mBGL.
- VERY LOOSE AND LOOSE SAND ENCOUNTERED BELOW FILL LEVEL (FROM 0.15-0.6 mBGL).
- LOW LYING GROUND, SHALLOW GROUNDWATER ENCOUNTERED.
6. GEOTECHNICAL PROPERTIES ALONG EASEMENT TP01 - TP07 (REF: A0012-0025-GEO-REP-10002)
- FILL GENERALLY ENCOUNTERED UP TO 0.2-0.6 mBGL.
- INFERRED LOW STRENGTH LIMESTONE ENCOUNTERED BELOW FILL LEVEL (FROM 0.2-0.6 mBGL).
- NO GROUNDWATER ENCOUNTERED. GROUNDWATER LEVEL SUBJECT TO TIDAL MOVEMENTS.
7. REFER TYPICAL CROSS SECTION 'D' FOR PIPE IN SHARED SAPN EASEMENT (P041992-05-00003_08).

LEGEND

- NEW OD648 X 6WT MSCL SINTAJOINT TRANSFER MAIN
- DN600 ISOLATION VALVE REFER DRG P041992-05-00003_04
- HYDRANT
- SCOUR
- DN1200 SCOUR PIT REFER DRG P041992-05-00003_05
- THRUST BLOCK, REFER DETAIL SHEET P041992-05-00003_02
- E-UG — EX. UNDERGROUND ELECTRICAL
- E-OH — EX. OVERHEAD ELECTRICAL
- HVE-OH — EX. H/V OVERHEAD ELEC.
- HVE-UG — EX. H/V UNDERGROUND ELEC.
- T — EX. TELECOM
- S — EX. SEWER / WASTE PIPE
- W — EX. WATER MAIN
- SW — EX. STORMWATER
- DCDB BOUNDARY
- EX. RAILWAY CORRIDOR
- BOREHOLE LOCATION
- STOBIE POLE WITH 3m EXCLUSION ZONE
- EX. VEGETATION TO BE REMOVED
- E-OH — PROPOSED OVERHEAD ELECTRICAL (PRINCIPAL SUPPLIED)
- PROPOSED POWER POLE LOCATION
- PRINCIPAL SUPPLIED LAND PARCEL BOUNDARY (2x 15m WIDE EASEMENTS)
- CP — CATHODIC PROTECTION TEST POINT, REFER GENERAL NOTES SHEET P041992-05-00001_02
- TR1 — TRANSFORMER RECTIFIER FOR ICCP ANODE (CP)

DIAL BEFORE YOU DIG
www.1100.com.au

WARNING
BEWARE OF OVERHEAD AND UNDERGROUND SERVICES

THE LOCATION OF OVERHEAD AND UNDERGROUND SERVICES ARE APPROXIMATE ONLY AND THEIR EXACT POSITION SHOULD BE PROVEN ON SITE
NO GUARANTEE IS GIVEN THAT ALL SERVICES ARE SHOWN
REFER TO ASSET OWNER FOR THEIR CLEARANCE AND APPROACH REQUIREMENTS

NOT FOR CONSTRUCTION

REVISION PANEL

REV	DATE	DRN	DETAILS	APR'D
0.1D	13.10.23	CSS	60% DESIGN	SW
0.1C	08.09.23	CSS	60% DRAFT DESIGN FOR REVIEW	SW
0.1B	14.07.23	CSS	30% CONCEPT DESIGN	SW
0.1A	07.06.23	CSS	30% CONCEPT DESIGN - DRAFT FOR REVIEW	SW

CURRENT REV CONTRACTOR: TONKIN / WSP
CURRENT REV PROJECT: 220258

CURRENT REV AUTHORISED 13.10.23
J.TYLER
SIGNATURE

DESIGN PANEL

DESIGNED	13.10.23	AUTHORISED	13.10.23
P.SWINCER/L.HAYSMAN		J.TYLER	
DRAWN	13.10.23	SIGNATURE	
C.SUTCLIFFE			
REVIEWED	13.10.23		
S.WHICHELO			

CONTRACTOR: TONKIN / WSP

Government of South Australia
SA Water

This drawing is the property of the SOUTH AUSTRALIAN WATER CORPORATION and shall not be copied or modified in part or in whole without authorization.

EYRE PENINSULA DESALINATION PLANT

TREATED WATER TRANSFER PIPELINE
NETWORK & RETICULATION
PLAN & LONGITUDINAL PROFILE CHN2970 - 3240

A1 SHT SIZE
TOTAL SHEETS:
PROJECT No: A0012-0025
0.1D REVISION
MAXIMO ID: P041992
SUPERSEDES:
DRAWING NUMBER
P041992-05-00002_12

0 2.5 5 10 15
1:250 (A1); 1:500 (A3)
0 5 10 20 30
1:500 (A1); 1:1000 (A3)

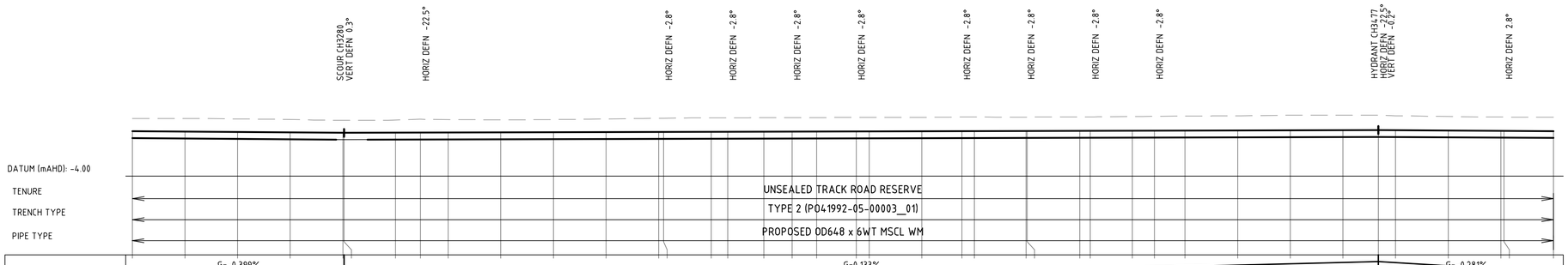

CHAINAGE (m)	DESIGN TOP (m AHD)	PIPE INVERT (m AHD)	EXISTING (m AHD)	PIPE COVER (m)
3240.000	0.276	-0.366	1.482	1.206
3250.000	0.236	-0.406	1.487	1.250
3260.000	0.196	-0.446	1.444	1.247
3270.000	0.156	-0.486	1.389	1.233
3280.000	0.116	-0.526	1.316	1.199
3280.244	0.115	-0.527	1.315	1.200
3290.000	0.128	-0.514	1.342	1.214
3294.767	0.135	-0.507	1.417	1.282
3300.000	0.142	-0.500	1.381	1.240
3310.000	0.155	-0.487	1.361	1.206
3320.000	0.168	-0.474	1.385	1.217
3330.000	0.181	-0.461	1.438	1.257
3340.000	0.195	-0.447	1.510	1.307
3340.938	0.196	-0.446	1.519	1.313
3350.000	0.208	-0.434	1.548	1.340
3353.138	0.212	-0.430	1.554	1.342
3360.000	0.221	-0.421	1.564	1.342
3365.338	0.228	-0.414	1.573	1.344
3370.000	0.235	-0.407	1.571	1.336
3377.538	0.245	-0.397	1.587	1.343
3380.000	0.248	-0.394	1.593	1.345
3390.000	0.261	-0.381	1.586	1.325
3397.591	0.271	-0.371	1.621	1.350
3400.000	0.274	-0.368	1.623	1.349
3409.791	0.287	-0.355	1.616	1.329
3410.000	0.288	-0.354	1.617	1.329
3420.000	0.301	-0.341	1.633	1.332
3421.991	0.304	-0.338	1.638	1.334
3430.000	0.314	-0.328	1.665	1.351
3434.191	0.320	-0.322	1.688	1.369
3440.000	0.328	-0.314	1.717	1.390
3450.000	0.341	-0.301	1.739	1.398
3460.000	0.354	-0.288	1.794	1.440
3470.000	0.367	-0.275	1.795	1.428
3476.727	0.376	-0.266	1.793	1.417
3480.000	0.367	-0.275	1.743	1.375
3490.000	0.339	-0.303	1.675	1.336
3500.000	0.311	-0.331	1.628	1.309
3500.919	0.309	-0.333	1.608	1.309
3510.000	0.283	-0.359	1.597	1.314

LONGITUDINAL PROFILE

HORIZONTAL SCALE 1 : 500
VERTICAL SCALE 1 : 250

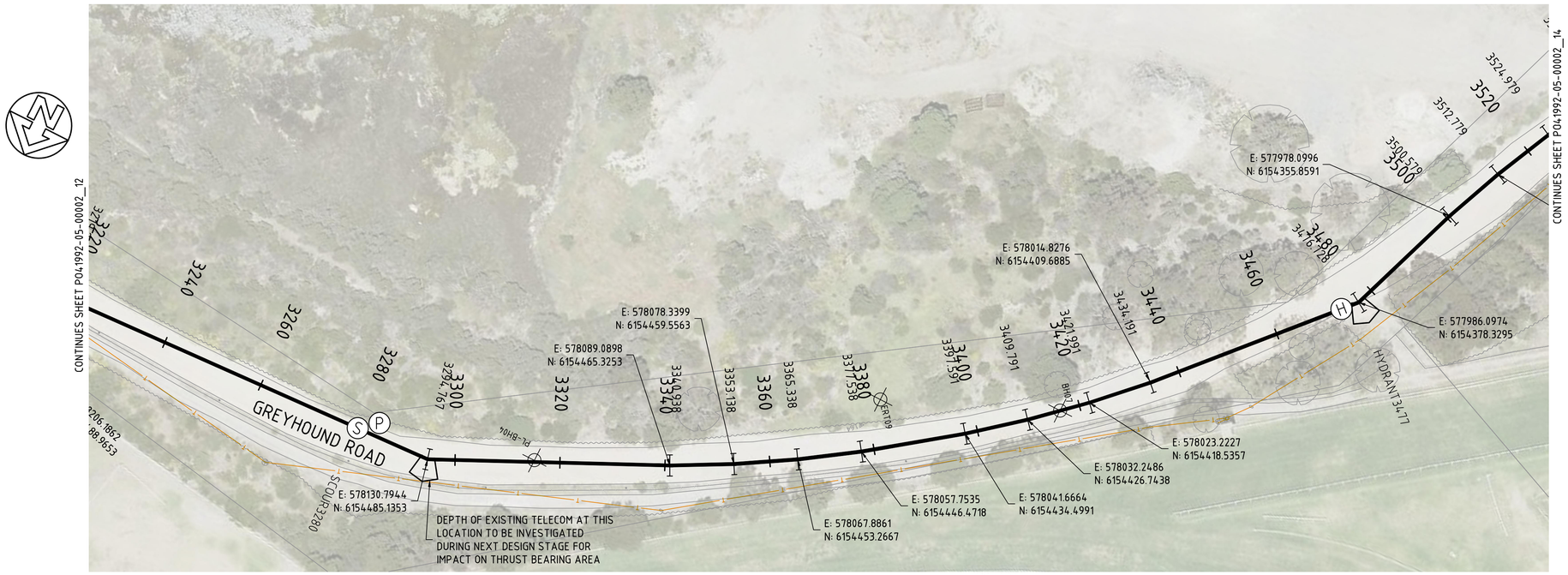

PLAN

SCALE 1:500

NOTES

1. FOR GENERAL NOTES REFER DRAWING P041992-05-00001_02.
2. PROVIDE CATHODIC PROTECTION TO SA WATER TS0440 & DRAWINGS STD-04-00001_(10,13,14 and 17).
3. GEOTECHNICAL PROPERTIES ALONG BLUE FIN ROAD BH12 - BH15 (REF: A0012-0025-GEO-REP-10002)
- FILL GENERALLY ENCOUNTERED UP TO 0.2-0.8 mBGL.
- INFERRED LOW STRENGTH LIMESTONE ENCOUNTERED BELOW FILL LEVEL (FROM 0.2-0.8 mBGL).
- GROUNDWATER NOT ENCOUNTERED.
4. GEOTECHNICAL PROPERTIES ALONG PROPER BAY ROAD BH7 - BH11 (REF: A0012-0025-GEO-REP-10002)
- FILL GENERALLY ENCOUNTERED UP TO 0.5-0.8 mBGL.
- LOOSE TO MEDIUM DENSE SAND ENCOUNTERED BELOW FILL LEVEL (FROM 0.5-0.8 mBGL).
- GROUNDWATER NOT ENCOUNTERED.
5. GEOTECHNICAL PROPERTIES ALONG GREYHOUND ROAD BH1 - BH6 (REF: A0012-0025-GEO-REP-10002)
- FILL GENERALLY ENCOUNTERED UP TO 0.15-0.6 mBGL.
- VERY LOOSE AND LOOSE SAND ENCOUNTERED BELOW FILL LEVEL (FROM 0.15-0.6 mBGL).
- LOW LYING GROUND, SHALLOW GROUNDWATER ENCOUNTERED.
6. GEOTECHNICAL PROPERTIES ALONG EASEMENT TP01 - TP07 (REF: A0012-0025-GEO-REP-10002)
- FILL GENERALLY ENCOUNTERED UP TO 0.2-0.6 mBGL.
- INFERRED LOW STRENGTH LIMESTONE ENCOUNTERED BELOW FILL LEVEL (FROM 0.2-0.6 mBGL).
- NO GROUNDWATER ENCOUNTERED. GROUNDWATER LEVEL SUBJECT TO TIDAL MOVEMENTS.
7. REFER TYPICAL CROSS SECTION 'D' FOR PIPE IN SHARED SAPN EASEMENT (P041992-05-00003_08).

LEGEND

- NEW OD648 X 6WT MSCL SINTAJOINT TRANSFER MAIN
- DN600 ISOLATION VALVE REFER DRG P041992-05-00003_04
- HYDRANT
- SCOUR
- DN1200 SCOUR PIT REFER DRG P041992-05-00003_05
- THRUST BLOCK, REFER DETAIL SHEET P041992-05-00003_02
- E-UG — EX. UNDERGROUND ELECTRICAL
- E-OH — EX. OVERHEAD ELECTRICAL
- HVE-OH — EX. H/V OVERHEAD ELEC.
- HVE-UG — EX. H/V UNDERGROUND ELEC.
- T — EX. TELECOM
- S — EX. SEWER / WASTE PIPE
- W — EX. WATER MAIN
- SW — EX. STORMWATER
- DCDB BOUNDARY
- EX. RAILWAY CORRIDOR
- BOREHOLE LOCATION
- STOBIE POLE WITH 3m EXCLUSION ZONE
- EX. VEGETATION TO BE REMOVED
- E-OH — PROPOSED OVERHEAD ELECTRICAL (PRINCIPAL SUPPLIED)
- PROPOSED POWER POLE LOCATION
- PRINCIPAL SUPPLIED LAND PARCEL BOUNDARY (2x 15m WIDE EASEMENTS)
- CP — CATHODIC PROTECTION TEST POINT, REFER GENERAL NOTES SHEET P041992-05-00001_02
- TR1 — TRANSFORMER RECTIFIER FOR ICCP ANODE (CP)

DIAL BEFORE YOU DIG
www.1100.com.au

WARNING
BEWARE OF OVERHEAD AND UNDERGROUND SERVICES

THE LOCATION OF OVERHEAD AND UNDERGROUND SERVICES ARE APPROXIMATE ONLY AND THEIR EXACT POSITION SHOULD BE PROVEN ON SITE
NO GUARANTEE IS GIVEN THAT ALL SERVICES ARE SHOWN
REFER TO ASSET OWNER FOR THEIR CLEARANCE AND APPROACH REQUIREMENTS

NOT FOR CONSTRUCTION

0 2.5 5 10 15 — 1:250 (A1); 1:500 (A3)
0 5 10 20 30 — 1:500 (A1); 1:1000 (A3)

REVISION PANEL

REV	DATE	DRN	DETAILS	APR'D
0.1D	13.10.23	CSS	60% DESIGN	SW
0.1C	08.09.23	CSS	60% DRAFT DESIGN FOR REVIEW	SW
0.1B	14.07.23	CSS	30% CONCEPT DESIGN	SW
0.1A	07.06.23	CSS	30% CONCEPT DESIGN - DRAFT FOR REVIEW	SW

CURRENT REV CONTRACTOR: TONKIN / WSP
CURRENT REV PROJECT: 220258

CURRENT REV AUTHORISED 13.10.23
J.TYLER
SIGNATURE

DESIGN PANEL

DESIGNED	13.10.23	AUTHORISED	13.10.23
P.SWINCER/L.HAYSMAN		J.TYLER	
DRAWN	13.10.23	SIGNATURE	
C.SUTCLIFFE			
REVIEWED	13.10.23		
S.WHICHELO			

CONTRACTOR: TONKIN / WSP

Government of South Australia
SA Water

This drawing is the property of the SOUTH AUSTRALIAN WATER CORPORATION and shall not be copied or modified in part or in whole without authorization.

EYRE PENINSULA DESALINATION PLANT

TREATED WATER TRANSFER PIPELINE NETWORK & RETICULATION

PLAN & LONGITUDINAL PROFILE CHN3240 - 3510

A1 SHT SIZE | TOTAL SHEETS: | PROJECT No: A0012-0025 | 0.1D REVISION
MAXIMO ID: P041992
SUPERSEDES:
DRAWING NUMBER
P041992-05-00002_13

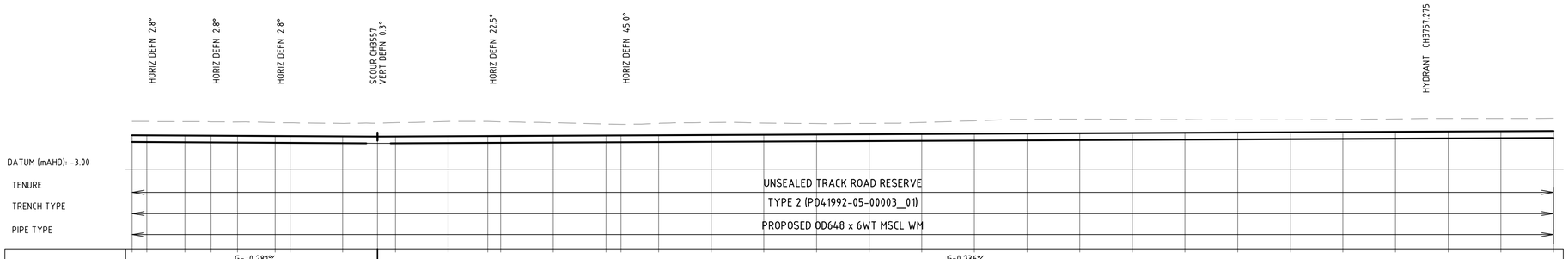
HORIZ DEFN 2.8°
HORIZ DEFN 2.8°
HORIZ DEFN 2.8°
SCOUR CH3557
VERT DEFN 0.3°
HORIZ DEFN 22.5°
HORIZ DEFN 45.0°
HYDRANT CH3757.275
DATUM (mAHD): -3.00
TENURE
TRENCH TYPE
PIPE TYPE
UNSEALED TRACK ROAD RESERVE
TYPE 2 (P041992-05-00003_01)
PROPOSED OD648 x 6WT MSCL WM
G=-0.281%
L=79.847
G=0.236%
L=293.483

| | | |

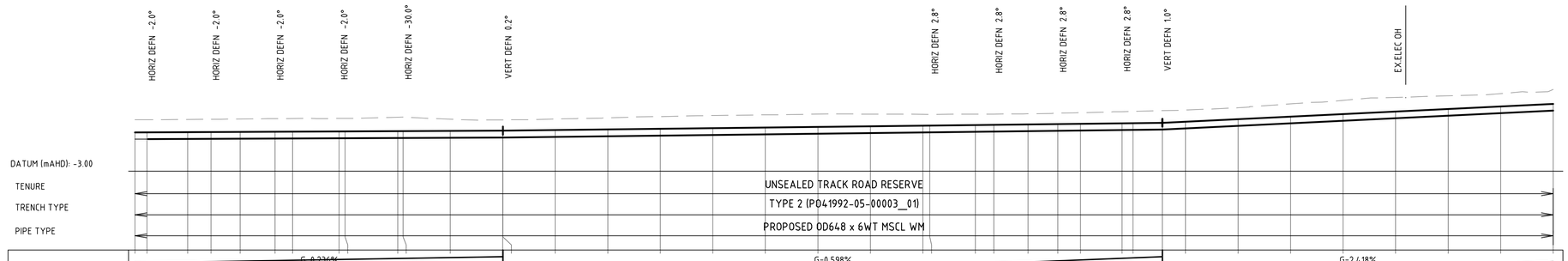

| PIPE GRADIENT | G=0.236% L=293.483 | | |

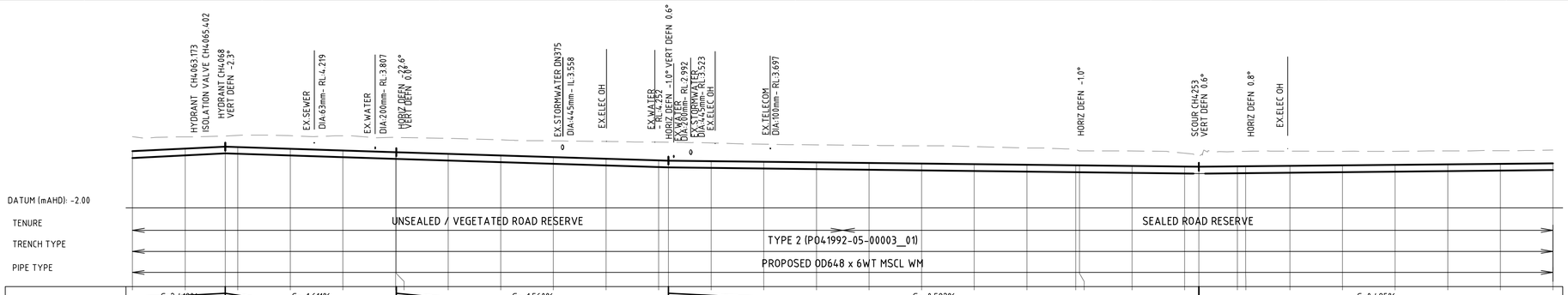

CHAINAGE (m)	DESIGN TOP (m AHD)	PIPE INVERT (m AHD)	EXISTING (m AHD)	PIPE COVER (m)
4050.000	3.396	2.754	4.774	1.378
4060.000	3.638	2.996	4.754	1.116
4067.623	3.823	3.180	4.822	1.000
4070.000	3.784	3.142	4.898	1.114
4080.000	3.623	2.981	4.873	1.250
4090.000	3.462	2.820	4.863	1.401
4100.000	3.301	2.659	4.704	1.404
4100.945	3.298	2.656	4.706	1.407
4110.000	3.145	2.503	4.610	1.465
4120.000	2.989	2.347	4.467	1.478
4130.000	2.833	2.191	4.380	1.547
4140.000	2.677	2.035	4.314	1.637
4150.000	2.521	1.879	4.257	1.737
4151.880	2.491	1.849	4.252	1.761
4160.000	2.444	1.802	4.175	1.731
4170.000	2.386	1.744	4.052	1.666
4180.000	2.328	1.686	3.990	1.662
4190.000	2.269	1.627	3.943	1.674
4200.000	2.211	1.569	3.906	1.695
4210.000	2.153	1.511	3.821	1.667
4220.000	2.095	1.453	3.696	1.601
4229.270	2.041	1.399	3.543	1.502
4230.000	2.037	1.395	3.424	1.388
4240.000	1.979	1.337	3.410	1.432
4250.000	1.920	1.278	3.195	1.275
4252.698	1.905	1.263	2.906	1.001
4260.000	1.941	1.299	3.360	1.419
4261.574	1.943	1.307	3.376	1.428
4270.000	1.990	1.348	3.396	1.405
4280.000	2.040	1.398	3.384	1.344
4290.000	2.089	1.447	3.373	1.284
4300.000	2.139	1.497	3.413	1.274
4310.000	2.188	1.546	3.437	1.249
4320.000	2.238	1.596	3.502	1.264

LONGITUDINAL PROFILE

HORIZONTAL SCALE 1 : 500
VERTICAL SCALE 1 : 250

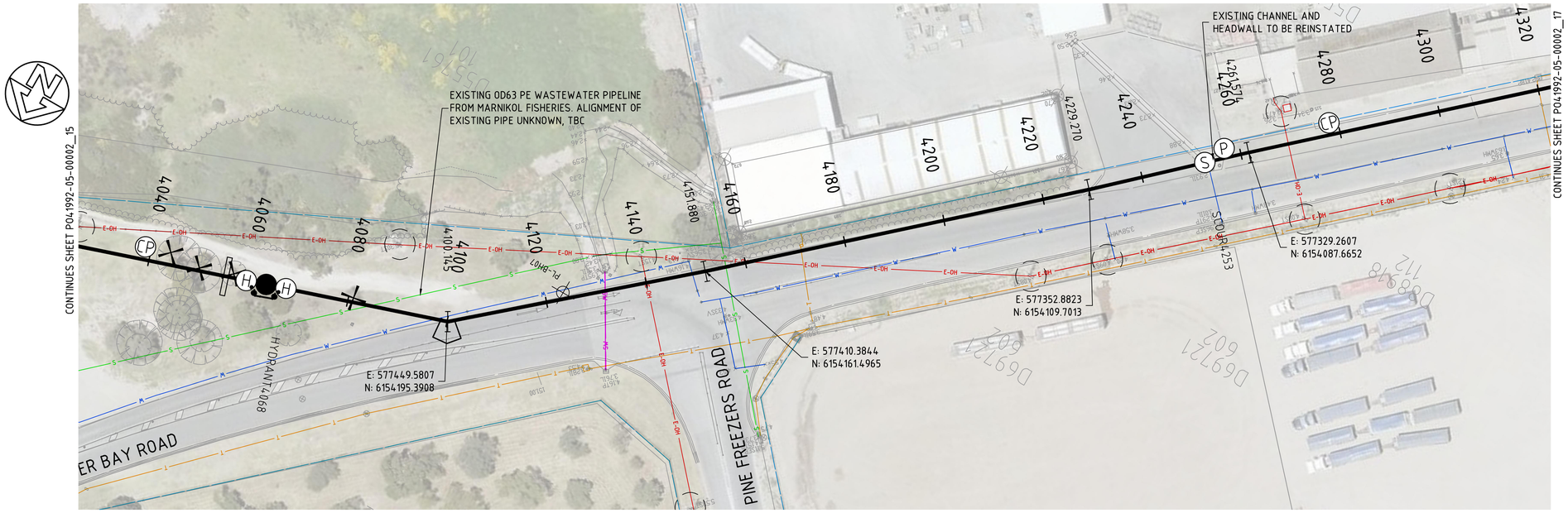

PLAN

SCALE 1:500

NOTES

1. FOR GENERAL NOTES REFER DRAWING P041992-05-00001_02.
2. PROVIDE CATHODIC PROTECTION TO SA WATER TS0440 & DRAWINGS STD-04-00001_(10,13,14 and 17).
3. GEOTECHNICAL PROPERTIES ALONG BLUE FIN ROAD BH12 - BH15 (REF: A0012-0025-GEO-REP-10002)
- FILL GENERALLY ENCOUNTERED UP TO 0.2-0.8 mBGL.
- INFERRED LOW STRENGTH LIMESTONE ENCOUNTERED BELOW FILL LEVEL (FROM 0.2-0.8 mBGL).
- GROUNDWATER NOT ENCOUNTERED.
4. GEOTECHNICAL PROPERTIES ALONG PROPER BAY ROAD BH7 - BH11 (REF: A0012-0025-GEO-REP-10002)
- FILL GENERALLY ENCOUNTERED UP TO 0.5-0.8 mBGL.
- LOOSE TO MEDIUM DENSE SAND ENCOUNTERED BELOW FILL LEVEL (FROM 0.5-0.8 mBGL).
- GROUNDWATER NOT ENCOUNTERED.
5. GEOTECHNICAL PROPERTIES ALONG GREYHOUND ROAD BH1 - BH6 (REF: A0012-0025-GEO-REP-10002)
- FILL GENERALLY ENCOUNTERED UP TO 0.15-0.6 mBGL.
- VERY LOOSE AND LOOSE SAND ENCOUNTERED BELOW FILL LEVEL (FROM 0.15-0.6 mBGL).
- LOW LYING GROUND, SHALLOW GROUNDWATER ENCOUNTERED.
6. GEOTECHNICAL PROPERTIES ALONG EASEMENT TP01 - TP07 (REF: A0012-0025-GEO-REP-10002)
- FILL GENERALLY ENCOUNTERED UP TO 0.2-0.6 mBGL.
- INFERRED LOW STRENGTH LIMESTONE ENCOUNTERED BELOW FILL LEVEL (FROM 0.2-0.6 mBGL).
- NO GROUNDWATER ENCOUNTERED. GROUNDWATER LEVEL SUBJECT TO TIDAL MOVEMENTS.
7. REFER TYPICAL CROSS SECTION 'D' FOR PIPE IN SHARED SAPN EASEMENT (P041992-05-00003_08).

LEGEND

- NEW OD648 X 6WT MSCL SINTAJOINT TRANSFER MAIN
- DN600 ISOLATION VALVE REFER DRG P041992-05-00003_04
- HYDRANT
- SCOUR
- DN1200 SCOUR PIT REFER DRG P041992-05-00003_05
- THRUST BLOCK, REFER DETAIL SHEET P041992-05-00003_02
- E-UG — EX. UNDERGROUND ELECTRICAL
- E-OH — EX. OVERHEAD ELECTRICAL
- HVE-OH — EX. H/V OVERHEAD ELEC.
- HVE-UG — EX. H/V UNDERGROUND ELEC.
- T — EX. TELECOM
- S — EX. SEWER / WASTE PIPE
- W — EX. WATER MAIN
- SW — EX. STORMWATER
- DCDB BOUNDARY
- EX. RAILWAY CORRIDOR
- BOREHOLE LOCATION
- STOBIE POLE WITH 3m EXCLUSION ZONE
- EX. VEGETATION TO BE REMOVED
- E-OH — PROPOSED OVERHEAD ELECTRICAL (PRINCIPAL SUPPLIED)
- PROPOSED POWER POLE LOCATION
- PRINCIPAL SUPPLIED LAND PARCEL BOUNDARY (2x 15m WIDE EASEMENTS)
- CP — CATHODIC PROTECTION TEST POINT, REFER GENERAL NOTES SHEET P041992-05-00001_02
- TR1 — TRANSFORMER RECTIFIER FOR ICCP ANODE (CP)

DIAL BEFORE YOU DIG
www.1100.com.au

WARNING
BEWARE OF OVERHEAD AND UNDERGROUND SERVICES

THE LOCATION OF OVERHEAD AND UNDERGROUND SERVICES ARE APPROXIMATE ONLY AND THEIR EXACT POSITION SHOULD BE PROVEN ON SITE
NO GUARANTEE IS GIVEN THAT ALL SERVICES ARE SHOWN
REFER TO ASSET OWNER FOR THEIR CLEARANCE AND APPROACH REQUIREMENTS

NOT FOR CONSTRUCTION

1:250 (A1); 1:500 (A3) — 1:500 (A1); 1:1000 (A3)

REVISION PANEL

REV	DATE	DRN	DETAILS	APR'D
0.1D	13.10.23	CSS	60% DESIGN	SW
0.1C	08.09.23	CSS	60% DRAFT DESIGN FOR REVIEW	SW
0.1B	14.07.23	CSS	30% CONCEPT DESIGN	SW
0.1A	07.06.23	CSS	30% CONCEPT DESIGN - DRAFT FOR REVIEW	SW

CURRENT REV CONTRACTOR: TONKIN / WSP — CURRENT REV PROJECT: 220258

CURRENT REV AUTHORISED 13.10.23 — J.TYLER — SIGNATURE

DESIGN PANEL
DESIGNED 13.10.23 P.SWINCER/L.HAYSMAN
DRAWN 13.10.23 C.SUTCLIFFE
REVIEWED 13.10.23 S.WHICHELO
AUTHORISED 13.10.23 J.TYLER
SIGNATURE
CONTRACTOR: TONKIN / WSP

Government of South Australia — SA Water

This drawing is the property of the SOUTH AUSTRALIAN WATER CORPORATION and shall not be copied or modified in part or in whole without authorization.

EYRE PENINSULA DESALINATION PLANT

TREATED WATER TRANSFER PIPELINE NETWORK & RETICULATION

PLAN & LONGITUDINAL PROFILE CHN4050 - 4320

A1 SHT SIZE — TOTAL SHEETS: — PROJECT No: A0012-0025 — 0.1D REVISION
MAXIMO ID: P041992
SUPERSEDES:
DRAWING NUMBER P041992-05-00002_16

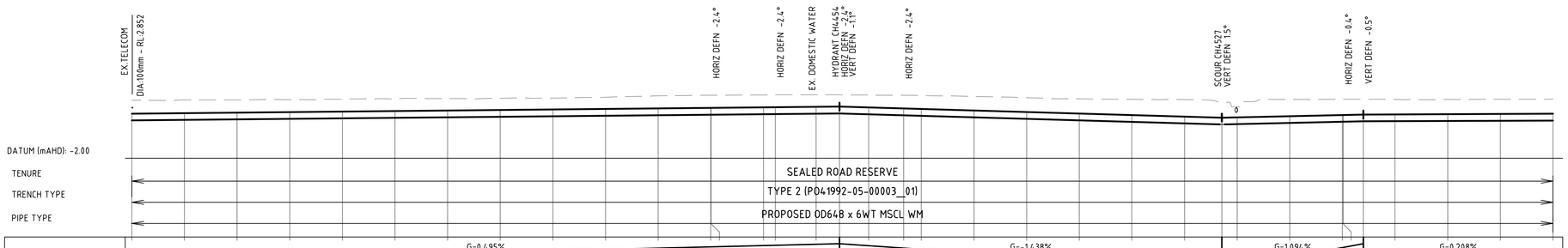
EX TELECOM
DIA:100mm - RL:2.852
HORIZ DEFN -2.4°
HORIZ DEFN -2.4°
EX. DOMESTIC WATER
HYDRANT CH4454
HORIZ DEFN -2.4°
VERT DEFN -1.1°
HORIZ DEFN -2.4°
SCOUR CH4527
VERT DEFN -1.5°
HORIZ DEFN -0.4°
VERT DEFN -0.5°
DATUM (mAHD): -2.00
TENURE
SEALED ROAD RESERVE
TRENCH TYPE
TYPE 2 (P041992-05-00003_01)
PIPE TYPE
PROPOSED OD648 x 6WT MSCL WM

| | | |

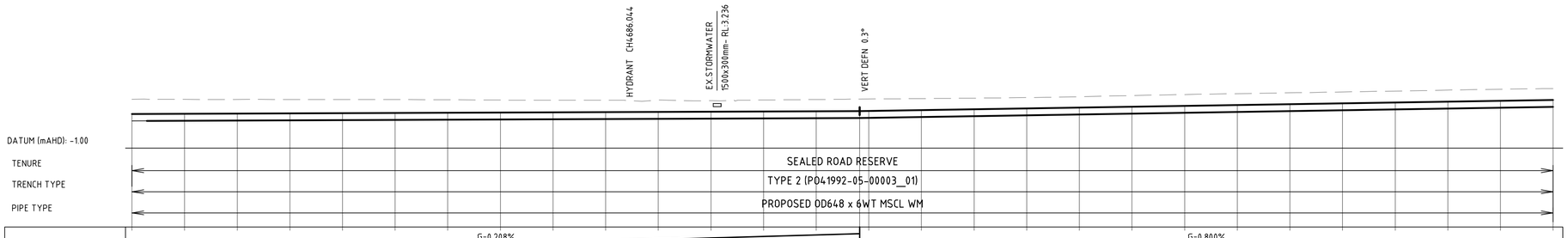
HYDRANT CH4686.044
EX STORMWATER 1500x300mm- RL:3.236
VERT DEFN 0.3°
DATUM (mAHD): -1.00
TENURE
SEALED ROAD RESERVE
TRENCH TYPE
TYPE 2 (P041992-05-00003_01)
PIPE TYPE
PROPOSED OD648 x 6WT MSCL WM

| | | |

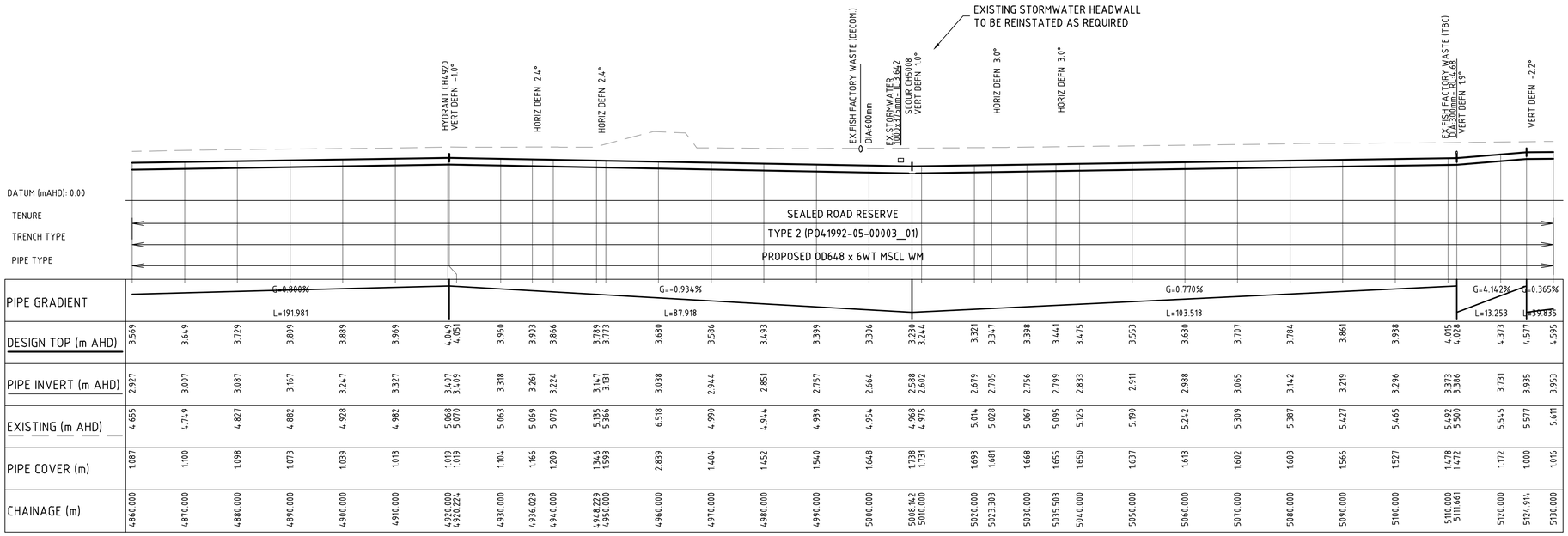

LONGITUDINAL PROFILE

HORIZONTAL SCALE 1 : 500
VERTICAL SCALE 1 : 250

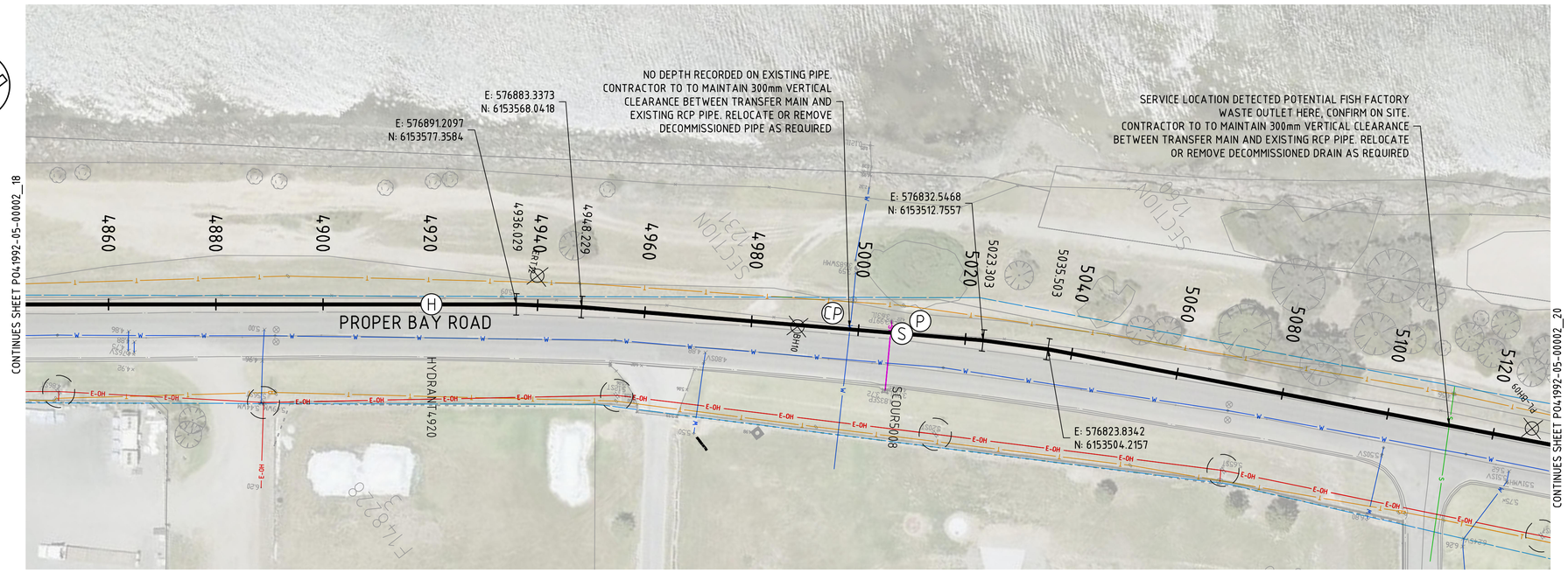

PLAN

SCALE 1:500

NOTES

1. FOR GENERAL NOTES REFER DRAWING P041992-05-00001_02.
2. PROVIDE CATHODIC PROTECTION TO SA WATER TS0440 & DRAWINGS STD-04-00001_(10,13,14 and 17).
3. GEOTECHNICAL PROPERTIES ALONG BLUE FIN ROAD BH12 - BH15 (REF: A0012-0025-GEO-REP-10002)
- FILL GENERALLY ENCOUNTERED UP TO 0.2-0.8 mBGL.
- INFERRED LOW STRENGTH LIMESTONE ENCOUNTERED BELOW FILL LEVEL (FROM 0.2-0.8 mBGL).
- GROUNDWATER NOT ENCOUNTERED.
4. GEOTECHNICAL PROPERTIES ALONG PROPER BAY ROAD BH7 - BH11 (REF: A0012-0025-GEO-REP-10002)
- FILL GENERALLY ENCOUNTERED UP TO 0.5-0.8 mBGL.
- LOOSE TO MEDIUM DENSE SAND ENCOUNTERED BELOW FILL LEVEL (FROM 0.5-0.8 mBGL).
- GROUNDWATER NOT ENCOUNTERED.
5. GEOTECHNICAL PROPERTIES ALONG GREYHOUND ROAD BH1 - BH6 (REF: A0012-0025-GEO-REP-10002)
- FILL GENERALLY ENCOUNTERED UP TO 0.15-0.6 mBGL.
- VERY LOOSE AND LOOSE SAND ENCOUNTERED BELOW FILL LEVEL (FROM 0.15-0.6 mBGL).
- LOW LYING GROUND, SHALLOW GROUNDWATER ENCOUNTERED.
6. GEOTECHNICAL PROPERTIES ALONG EASEMENT TP01 - TP07 (REF: A0012-0025-GEO-REP-10002)
- FILL GENERALLY ENCOUNTERED UP TO 0.2-0.6 mBGL.
- INFERRED LOW STRENGTH LIMESTONE ENCOUNTERED BELOW FILL LEVEL (FROM 0.2-0.6 mBGL).
- NO GROUNDWATER ENCOUNTERED. GROUNDWATER LEVEL SUBJECT TO TIDAL MOVEMENTS.
7. REFER TYPICAL CROSS SECTION 'D' FOR PIPE IN SHARED SAPN EASEMENT (P041992-05-00003_08).

LEGEND

- NEW OD648 X 6WT MSCL SINTAJOINT TRANSFER MAIN
- DN600 ISOLATION VALVE REFER DRG P041992-05-00003_04
- HYDRANT
- SCOUR
- DN1200 SCOUR PIT REFER DRG P041992-05-00003_05
- THRUST BLOCK, REFER DETAIL SHEET P041992-05-00003_02
- E-UG — EX. UNDERGROUND ELECTRICAL
- E-OH — EX. OVERHEAD ELECTRICAL
- HVE-OH — EX. H/V OVERHEAD ELEC.
- HVE-UG — EX. H/V UNDERGROUND ELEC.
- T — EX. TELECOM
- S — EX. SEWER / WASTE PIPE
- W — EX. WATER MAIN
- SW — EX. STORMWATER
- DCDB BOUNDARY
- EX. RAILWAY CORRIDOR
- BOREHOLE LOCATION
- STOBIE POLE WITH 3m EXCLUSION ZONE
- EX. VEGETATION TO BE REMOVED
- E-OH — PROPOSED OVERHEAD ELECTRICAL (PRINCIPAL SUPPLIED)
- PROPOSED POWER POLE LOCATION
- PRINCIPAL SUPPLIED LAND PARCEL BOUNDARY (2x 15m WIDE EASEMENTS)
- CP — CATHODIC PROTECTION TEST POINT, REFER GENERAL NOTES SHEET P041992-05-00001_02
- TR1 — TRANSFORMER RECTIFIER FOR ICCP ANODE (CP)

DIAL BEFORE YOU DIG
www.1100.com.au

WARNING
BEWARE OF OVERHEAD AND UNDERGROUND SERVICES

THE LOCATION OF OVERHEAD AND UNDERGROUND SERVICES ARE APPROXIMATE ONLY AND THEIR EXACT POSITION SHOULD BE PROVEN ON SITE.
NO GUARANTEE IS GIVEN THAT ALL SERVICES ARE SHOWN
REFER TO ASSET OWNER FOR THEIR CLEARANCE AND APPROACH REQUIREMENTS

NOT FOR CONSTRUCTION

1:250 (A1); 1:500 (A3) — 0 2.5 5 10 15
1:500 (A1); 1:1000 (A3) — 0 5 10 20 30

REVISION PANEL

REV	DATE	DRN	DETAILS	APR'D
0.1D	13.10.23	CSS	60% DESIGN	SW
0.1C	08.09.23	CSS	60% DRAFT DESIGN FOR REVIEW	SW
0.1B	14.07.23	CSS	30% CONCEPT DESIGN	SW
0.1A	07.06.23	CSS	30% CONCEPT DESIGN - DRAFT FOR REVIEW	SW

CURRENT REV CONTRACTOR: TONKIN / WSP — CURRENT REV PROJECT: 220258

CURRENT REV AUTHORISED 13.10.23 J.TYLER SIGNATURE

DESIGN PANEL

DESIGNED	13.10.23	AUTHORISED	13.10.23
P.SWINCER/L.HAYSMAN		J.TYLER	
DRAWN	13.10.23	SIGNATURE	
C.SUTCLIFFE			
REVIEWED	13.10.23		
S.WHICHELO			

CONTRACTOR: TONKIN / WSP

Government of South Australia — SA Water

This drawing is the property of the SOUTH AUSTRALIAN WATER CORPORATION and shall not be copied or modified in part or in whole without authorization.

EYRE PENINSULA DESALINATION PLANT

TREATED WATER TRANSFER PIPELINE NETWORK & RETICULATION

PLAN & LONGITUDINAL PROFILE CHN4860 - 5130

A1 SHT SIZE — TOTAL SHEETS: — PROJECT No: A0012-0025 — 0.1D REVISION

MAXIMO ID: P041992

SUPERSEDES:

DRAWING NUMBER P041992-05-00002_19

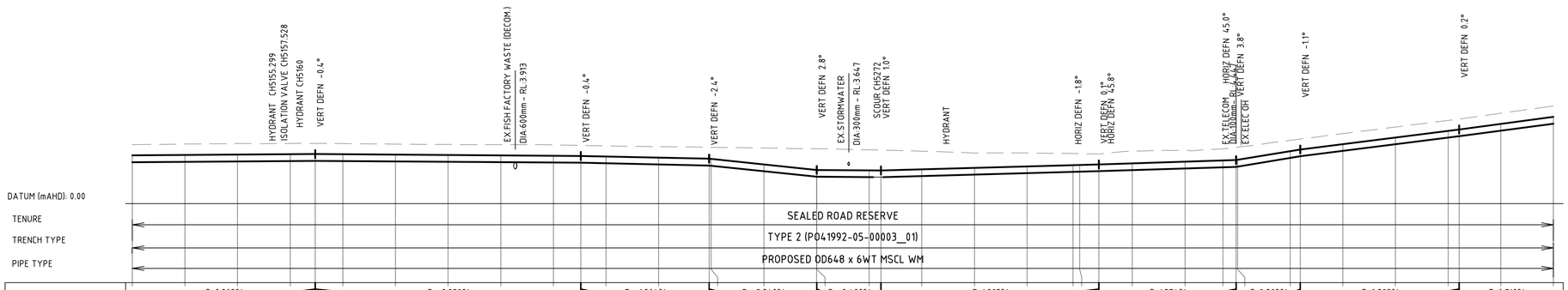

PIPE GRADIENT	G=0.365%	G=-0.358%	G=-1.064%	G=-5.240%	G=-0.400%	G=1.395%	G=1.574%	G=8.292%	G=6.295%	G=6.710%
	L=39.835	L=50.474	L=24.359	L=20.471	L=12.200	L=41.374	L=26.093	L=12.200	L=30.182	L=58.869

DESIGN TOP (m AHD)	PIPE INVERT (m AHD)	EXISTING (m AHD)	PIPE COVER (m)	CHAINAGE (m)
4.595	3.953	5.611	1.016	5130.000
4.632	3.990	5.672	1.040	5140.000
4.668	4.026	5.717	1.049	5150.000
4.705	4.063	5.732	1.027	5160.000
4.722	4.080	5.722	1.000	5164.749
4.703	4.061	5.717	1.014	5170.000
4.667	4.025	5.672	1.005	5180.000
4.632	3.990	5.632	1.001	5190.000
4.596	3.954	5.616	1.020	5200.000
4.560	3.918	5.596	1.036	5210.000
4.541	3.899	5.549	1.008	5215.222
4.490	3.848	5.507	1.016	5220.000
4.384	3.742	5.428	1.044	5230.000
4.282 4.260	3.640 3.618	5.371 5.369	1.089 1.108	5239.581 5240.000
3.736	3.094	5.296	1.560	5250.000
3.212 3.209	2.570 2.567	5.223 5.223	2.011 2.013	5260.000 5260.052
3.170 3.161	2.528 2.519	5.121 5.096	1.952 1.935	5270.000 5272.252
3.269	2.627	5.003	1.735	5280.000
3.408	2.766	4.834	1.426	5290.000
3.548	2.906	4.827	1.280	5300.000
3.669 3.687	3.027 3.045	4.777 4.767	1.107 1.080	5308.737 5310.000
3.738	3.096	4.738	1.000	5313.626
3.838	3.196	5.000	1.162	5320.000
3.995	3.353	5.077	1.081	5330.000
4.109 4.148 4.172	3.467 3.506 3.530	5.224 5.359 5.375	1.115 1.211 1.203	5337.207 5339.719 5340.000
5.001 5.160	4.359 4.518	6.031 6.152	1.030 0.992	5350.000 5351.919
5.669	5.027	6.667	0.999	5360.000
6.298	5.656	7.299	1.000	5370.000
6.928 7.060	6.286 6.418	7.928 8.060	1.000 1.000	5380.000 5382.101
7.590	6.948	8.603	1.013	5390.000
8.261	7.619	9.293	1.032	5400.000

LONGITUDINAL PROFILE

HORIZONTAL SCALE 1 : 500
VERTICAL SCALE 1 : 250

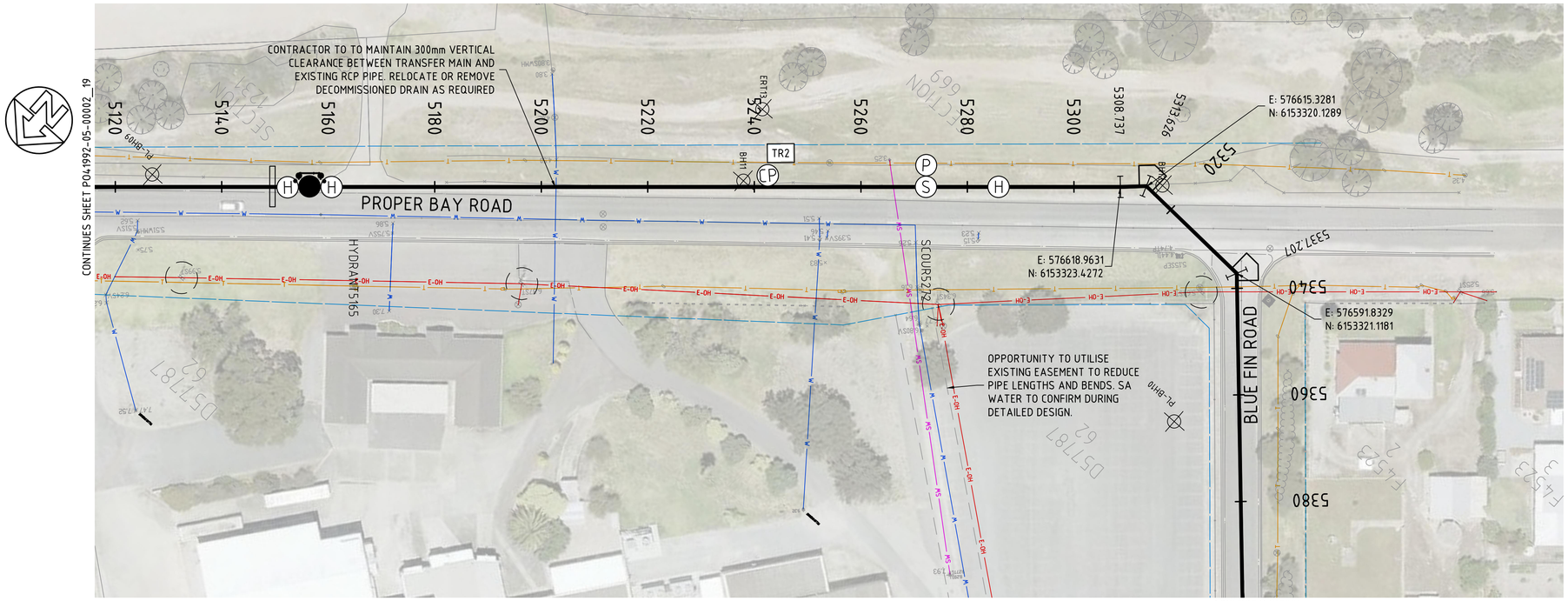

PLAN

SCALE 1:500

NOTES

1. FOR GENERAL NOTES REFER DRAWING P041992-05-00001_02.
2. PROVIDE CATHODIC PROTECTION TO SA WATER TS0440 & DRAWINGS STD-04-00001_(10,13,14 and 17).
3. GEOTECHNICAL PROPERTIES ALONG BLUE FIN ROAD BH12 - BH15 (REF: A0012-0025-GEO-REP-10002)
- FILL GENERALLY ENCOUNTERED UP TO 0.2-0.8 mBGL.
- INFERRED LOW STRENGTH LIMESTONE ENCOUNTERED BELOW FILL LEVEL (FROM 0.2-0.8 mBGL).
- GROUNDWATER NOT ENCOUNTERED.
4. GEOTECHNICAL PROPERTIES ALONG PROPER BAY ROAD BH7 - BH11 (REF: A0012-0025-GEO-REP-10002)
- FILL GENERALLY ENCOUNTERED UP TO 0.5-0.8 mBGL.
- LOOSE TO MEDIUM DENSE SAND ENCOUNTERED BELOW FILL LEVEL (FROM 0.5-0.8 mBGL).
- GROUNDWATER NOT ENCOUNTERED.
5. GEOTECHNICAL PROPERTIES ALONG GREYHOUND ROAD BH1 - BH6 (REF: A0012-0025-GEO-REP-10002)
- FILL GENERALLY ENCOUNTERED UP TO 0.15-0.6 mBGL.
- VERY LOOSE AND LOOSE SAND ENCOUNTERED BELOW FILL LEVEL (FROM 0.15-0.6 mBGL).
- LOW LYING GROUND, SHALLOW GROUNDWATER ENCOUNTERED.
6. GEOTECHNICAL PROPERTIES ALONG EASEMENT TP01 - TP07 (REF: A0012-0025-GEO-REP-10002)
- FILL GENERALLY ENCOUNTERED UP TO 0.2-0.6 mBGL.
- INFERRED LOW STRENGTH LIMESTONE ENCOUNTERED BELOW FILL LEVEL (FROM 0.2-0.6 mBGL).
- NO GROUNDWATER ENCOUNTERED. GROUNDWATER LEVEL SUBJECT TO TIDAL MOVEMENTS.
7. REFER TYPICAL CROSS SECTION 'D' FOR PIPE IN SHARED SAPN EASEMENT (P041992-05-00003_08).

LEGEND

- NEW OD648 X 6WT MSCL SINTAJOINT TRANSFER MAIN
- DN600 ISOLATION VALVE REFER DRG P041992-05-00003_04
- HYDRANT
- SCOUR
- DN1200 SCOUR PIT REFER DRG P041992-05-00003_05
- THRUST BLOCK, REFER DETAIL SHEET P041992-05-00003_02
- E-UG — EX. UNDERGROUND ELECTRICAL
- E-OH — EX. OVERHEAD ELECTRICAL
- HVE-OH — EX. H/V OVERHEAD ELEC.
- HVE-UG — EX. H/V UNDERGROUND ELEC.
- T — EX. TELECOM
- S — EX. SEWER / WASTE PIPE
- W — EX. WATER MAIN
- SW — EX. STORMWATER
- DCDB BOUNDARY
- EX. RAILWAY CORRIDOR
- BOREHOLE LOCATION
- STOBIE POLE WITH 3m EXCLUSION ZONE
- EX. VEGETATION TO BE REMOVED
- E-OH — PROPOSED OVERHEAD ELECTRICAL (PRINCIPAL SUPPLIED)
- PROPOSED POWER POLE LOCATION
- PRINCIPAL SUPPLIED LAND PARCEL BOUNDARY (2x 15m WIDE EASEMENTS)
- CP — CATHODIC PROTECTION TEST POINT, REFER GENERAL NOTES SHEET P041992-05-00001_02
- TR1 — TRANSFORMER RECTIFIER FOR ICCP ANODE (CP)

DIAL BEFORE YOU DIG
www.1100.com.au

WARNING
BEWARE OF OVERHEAD AND UNDERGROUND SERVICES

THE LOCATION OF OVERHEAD AND UNDERGROUND SERVICES ARE APPROXIMATE ONLY AND THEIR EXACT POSITION SHOULD BE PROVEN ON SITE
NO GUARANTEE IS GIVEN THAT ALL SERVICES ARE SHOWN
REFER TO ASSET OWNER FOR THEIR CLEARANCE AND APPROACH REQUIREMENTS

NOT FOR CONSTRUCTION

REVISION PANEL

REV	DATE	DRN	DETAILS	APR'D
0.1D	13.10.23	CSS	60% DESIGN	SW
0.1C	08.09.23	CSS	60% DRAFT DESIGN FOR REVIEW	SW
0.1B	14.07.23	CSS	30% CONCEPT DESIGN	SW
0.1A	07.06.23	CSS	30% CONCEPT DESIGN - DRAFT FOR REVIEW	SW

CURRENT REV CONTRACTOR: TONKIN / WSP
CURRENT REV PROJECT: 220258

CURRENT REV AUTHORISED 13.10.23
J.TYLER
SIGNATURE

DESIGN PANEL

DESIGNED	13.10.23	AUTHORISED	13.10.23
P.SWINCER/L.HAYSMAN		J.TYLER	
DRAWN	13.10.23	SIGNATURE	
C.SUTCLIFFE			
REVIEWED	13.10.23		
S.WHICHELO			

CONTRACTOR: TONKIN / WSP

Government of South Australia
SA Water

This drawing is the property of the SOUTH AUSTRALIAN WATER CORPORATION and shall not be copied or modified in part or in whole without authorization.

EYRE PENINSULA DESALINATION PLANT

TREATED WATER TRANSFER PIPELINE
NETWORK & RETICULATION
PLAN & LONGITUDINAL PROFILE CHN5130 - 5400

A1 SHT SIZE
TOTAL SHEETS:
PROJECT No: A0012-0025
0.1D REVISION
MAXIMO ID: P041992
SUPERSEDES:
DRAWING NUMBER
P041992-05-00002_20

0 2.5 5 10 15 — 1:250 (A1); 1:500 (A3)
0 5 10 20 30 — 1:500 (A1); 1:1000 (A3)

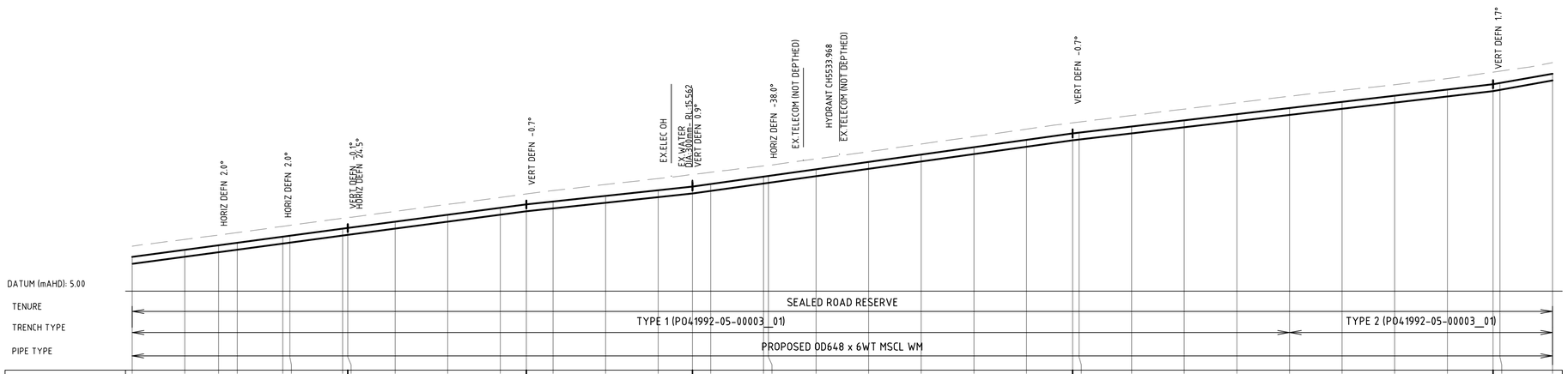

PIPE GRADIENT	G=6.710% L=58.869	G=6.611% L=33.984	G=5.392% L=31.553	G=6.999% L=72.280	G=5.852% L=79.911	G=8.879% L=40.363

CHAINAGE (m)	DESIGN TOP (m AHD)	PIPE INVERT (m AHD)	EXISTING (m AHD)	PIPE COVER (m)
5400.000	8.261	7.619	9.293	1.032
5410.000	8.932	8.290	9.933	1.001
5416.438	9.364	8.722	10.345	0.981
5420.000	9.603	8.961	10.580	0.977
5428.638	10.183	9.541	11.179	0.997
5430.000	10.274	9.632	11.275	1.001
5440.000	10.945	10.303	11.949	1.004
5440.970	11.010	10.368	12.010	1.000
5450.000	11.607	10.965	12.606	0.999
5460.000	12.268	11.626	13.273	1.005
5470.000	12.929	12.287	13.928	0.999
5474.953	13.257	12.615	14.257	1.000
5480.000	13.529	12.887	14.571	1.042
5490.000	14.068	13.426	15.155	1.086
5500.000	14.607	13.965	15.720	1.112
5506.507	14.958	14.316	16.102	1.144
5510.000	15.203	14.561	16.313	1.110
5520.000	15.903	15.261	16.920	1.018
5520.957	15.970	15.328	16.972	1.003
5530.000	16.602	15.960	17.587	0.985
5540.000	17.302	16.660	18.276	0.974
5550.000	18.002	17.360	18.997	0.994
5560.000	18.702	18.060	19.713	1.011
5570.000	19.402	18.760	20.422	1.020
5578.786	20.017	19.375	21.017	1.000
5580.000	20.088	19.446	21.093	1.005
5590.000	20.673	20.031	21.715	1.042
5600.000	21.258	20.616	22.332	1.073
5610.000	21.844	21.202	22.939	1.095
5620.000	22.429	21.787	23.548	1.120
5630.000	23.014	22.372	24.107	1.093
5640.000	23.599	22.957	24.649	1.049
5650.000	24.184	23.542	25.237	1.052
5658.698	24.693	24.051	25.842	1.149
5660.000	24.809	24.167	25.936	1.127
5670.000	25.697	25.055	26.745	1.048

LONGITUDINAL PROFILE

HORIZONTAL SCALE 1 : 500
VERTICAL SCALE 1 : 250

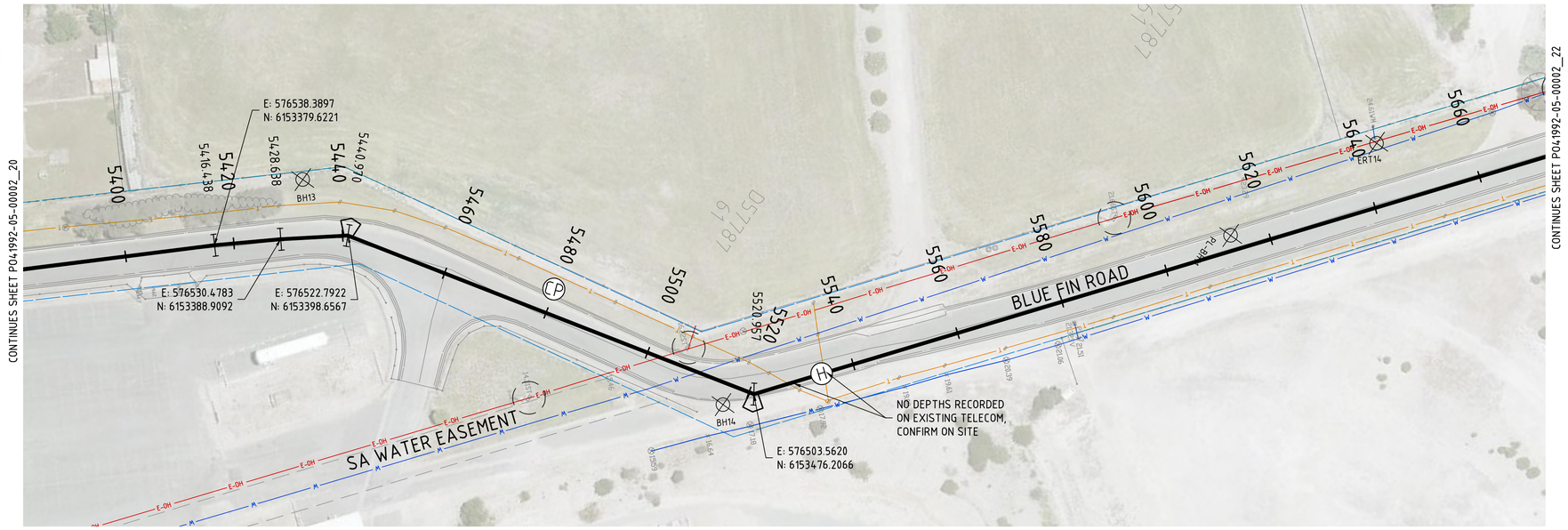

PLAN

SCALE 1:500

NOTES

1. FOR GENERAL NOTES REFER DRAWING P041992-05-00001_02.
2. PROVIDE CATHODIC PROTECTION TO SA WATER TS0440 & DRAWINGS STD-04-00001_(10,13,14 and 17).
3. GEOTECHNICAL PROPERTIES ALONG BLUE FIN ROAD BH12 - BH15 (REF: A0012-0025-GEO-REP-10002)
- FILL GENERALLY ENCOUNTERED UP TO 0.2-0.8 mBGL.
- INFERRED LOW STRENGTH LIMESTONE ENCOUNTERED BELOW FILL LEVEL (FROM 0.2-0.8 mBGL).
- GROUNDWATER NOT ENCOUNTERED.
4. GEOTECHNICAL PROPERTIES ALONG PROPER BAY ROAD BH7 - BH11 (REF: A0012-0025-GEO-REP-10002)
- FILL GENERALLY ENCOUNTERED UP TO 0.5-0.8 mBGL.
- LOOSE TO MEDIUM DENSE SAND ENCOUNTERED BELOW FILL LEVEL (FROM 0.5-0.8 mBGL).
- GROUNDWATER NOT ENCOUNTERED.
5. GEOTECHNICAL PROPERTIES ALONG GREYHOUND ROAD BH1 - BH6 (REF: A0012-0025-GEO-REP-10002)
- FILL GENERALLY ENCOUNTERED UP TO 0.15-0.6 mBGL.
- VERY LOOSE AND LOOSE SAND ENCOUNTERED BELOW FILL LEVEL (FROM 0.15-0.6 mBGL).
- LOW LYING GROUND, SHALLOW GROUNDWATER ENCOUNTERED.
6. GEOTECHNICAL PROPERTIES ALONG EASEMENT TP01 - TP07 (REF: A0012-0025-GEO-REP-10002)
- FILL GENERALLY ENCOUNTERED UP TO 0.2-0.6 mBGL.
- INFERRED LOW STRENGTH LIMESTONE ENCOUNTERED BELOW FILL LEVEL (FROM 0.2-0.6 mBGL).
- NO GROUNDWATER ENCOUNTERED. GROUNDWATER LEVEL SUBJECT TO TIDAL MOVEMENTS.
7. REFER TYPICAL CROSS SECTION 'D' FOR PIPE IN SHARED SAPN EASEMENT (P041992-05-00003_08).

LEGEND

- NEW OD648 X 6WT MSCL SINTAJOINT TRANSFER MAIN
- DN600 ISOLATION VALVE REFER DRG P041992-05-00003_04
- HYDRANT
- SCOUR
- DN1200 SCOUR PIT REFER DRG P041992-05-00003_05
- THRUST BLOCK, REFER DETAIL SHEET P041992-05-00003_02
- E-UG — EX. UNDERGROUND ELECTRICAL
- E-OH — EX. OVERHEAD ELECTRICAL
- HVE-OH — EX. H/V OVERHEAD ELEC.
- HVE-UG — EX. H/V UNDERGROUND ELEC.
- T — EX. TELECOM
- S — EX. SEWER / WASTE PIPE
- W — EX. WATER MAIN
- SW — EX. STORMWATER
- DCDB BOUNDARY
- EX. RAILWAY CORRIDOR
- BOREHOLE LOCATION
- STOBIE POLE WITH 3m EXCLUSION ZONE
- EX. VEGETATION TO BE REMOVED
- E-OH — PROPOSED OVERHEAD ELECTRICAL (PRINCIPAL SUPPLIED)
- PROPOSED POWER POLE LOCATION
- PRINCIPAL SUPPLIED LAND PARCEL BOUNDARY (2x 15m WIDE EASEMENTS)
- CP — CATHODIC PROTECTION TEST POINT, REFER GENERAL NOTES SHEET P041992-05-00001_02
- TR1 — TRANSFORMER RECTIFIER FOR ICCP ANODE (CP)

DIAL BEFORE YOU DIG
www.1100.com.au

WARNING
BEWARE OF OVERHEAD AND UNDERGROUND SERVICES

THE LOCATION OF OVERHEAD AND UNDERGROUND SERVICES ARE APPROXIMATE ONLY AND THEIR EXACT POSITION SHOULD BE PROVEN ON SITE
NO GUARANTEE IS GIVEN THAT ALL SERVICES ARE SHOWN
REFER TO ASSET OWNER FOR THEIR CLEARANCE AND APPROACH REQUIREMENTS

NOT FOR CONSTRUCTION

REVISION PANEL

REV	DATE	DRN	DETAILS	APR'D
0.1D	13.10.23	CSS	60% DESIGN	SW
0.1C	08.09.23	CSS	60% DRAFT DESIGN FOR REVIEW	SW
0.1B	14.07.23	CSS	30% CONCEPT DESIGN	SW
0.1A	07.06.23	CSS	30% CONCEPT DESIGN - DRAFT FOR REVIEW	SW

CURRENT REV CONTRACTOR: TONKIN / WSP
CURRENT REV PROJECT: 220258

CURRENT REV 13.10.23
AUTHORISED J.TYLER
SIGNATURE

DESIGN PANEL

DESIGNED	13.10.23	AUTHORISED	13.10.23
P.SWINCER/L.HAYSMAN		J.TYLER	
DRAWN	13.10.23	SIGNATURE	
C.SUTCLIFFE			
REVIEWED	13.10.23		
S.WHICHELO			

CONTRACTOR: TONKIN / WSP

Government of South Australia
SA Water

This drawing is the property of the SOUTH AUSTRALIAN WATER CORPORATION and shall not be copied or modified in part or in whole without authorization.

EYRE PENINSULA DESALINATION PLANT

TREATED WATER TRANSFER PIPELINE
NETWORK & RETICULATION
PLAN & LONGITUDINAL PROFILE CHN5400 - 5670

A1 SHT SIZE
TOTAL SHEETS:
PROJECT No: A0012-0025
0.1D REVISION
MAXIMO ID: P041992
SUPERSEDES:
DRAWING NUMBER
P041992-05-00002_21

1:250 (A1); 1:500 (A3)
1:500 (A1); 1:1000 (A3)

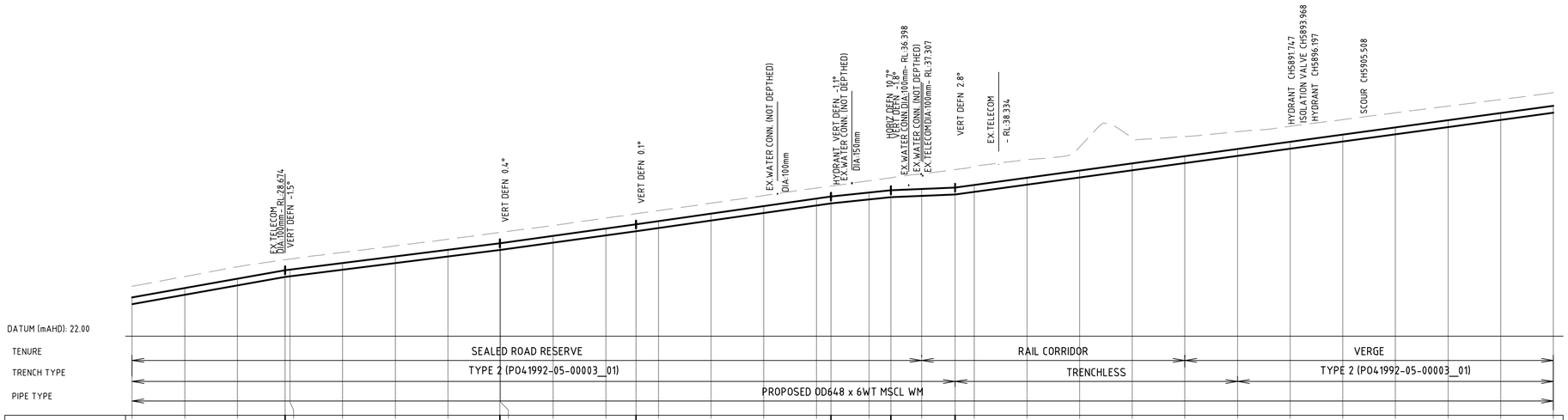

DESIGN TOP (m AHD)	25.697	26.585	27.473	28.377 28.358	28.964	29.592	30.220	30.840 30.849	31.542	32.235	32.630	32.936	33.650	34.363	35.077	35.275	35.654	35.873	35.991	36.119	36.368	37.053	37.737	38.422	39.106	39.791	40.475	41.160	41.844	42.529	43.214	43.898
PIPE INVERT (m AHD)	25.055	25.943	26.831	27.655 27.694	28.322	28.950	29.578	30.198 30.207	30.900	31.593	31.988	32.294	33.008	33.721	34.435	34.633	35.012	35.231	35.349	35.477	35.726	36.411	37.095	37.780	38.464	39.149	39.833	40.518	41.202	41.887	42.572	43.256
EXISTING (m AHD)	26.745	27.675	28.603	29.369 29.355	29.972	30.589	31.222	31.857 31.866	32.534	33.232	33.641	33.942	34.649	35.370	36.082	36.275	36.781	37.068	37.428	37.829	38.146	38.778	39.991	40.837	40.977	41.435	41.957	42.577	43.238	43.867	44.491	45.138
PIPE COVER (m)	1.048	1.091	1.131	0.992 0.999	1.008	0.997	1.002	1.017 1.017	0.992	0.997	1.011	1.006	0.999	1.007	1.005	1.000	1.126	1.196	1.437	1.710	1.777	1.725	2.254	2.415	1.871	1.644	1.482	1.417	1.394	1.338	1.277	1.240
CHAINAGE (m)	5670.000	5680.000	5690.000	5699.061 5700.000	5710.000	5720.000	5730.000	5739.867 5740.000	5750.000	5760.000	5765.708	5770.000	5780.000	5790.000	5800.000	5802.776	5810.000	5814.158	5820.000	5826.358	5830.000	5840.000	5850.000	5860.000	5870.000	5880.000	5890.000	5900.000	5910.000	5920.000	5930.000	5940.000

LONGITUDINAL PROFILE

HORIZONTAL SCALE 1 : 500
VERTICAL SCALE 1 : 250

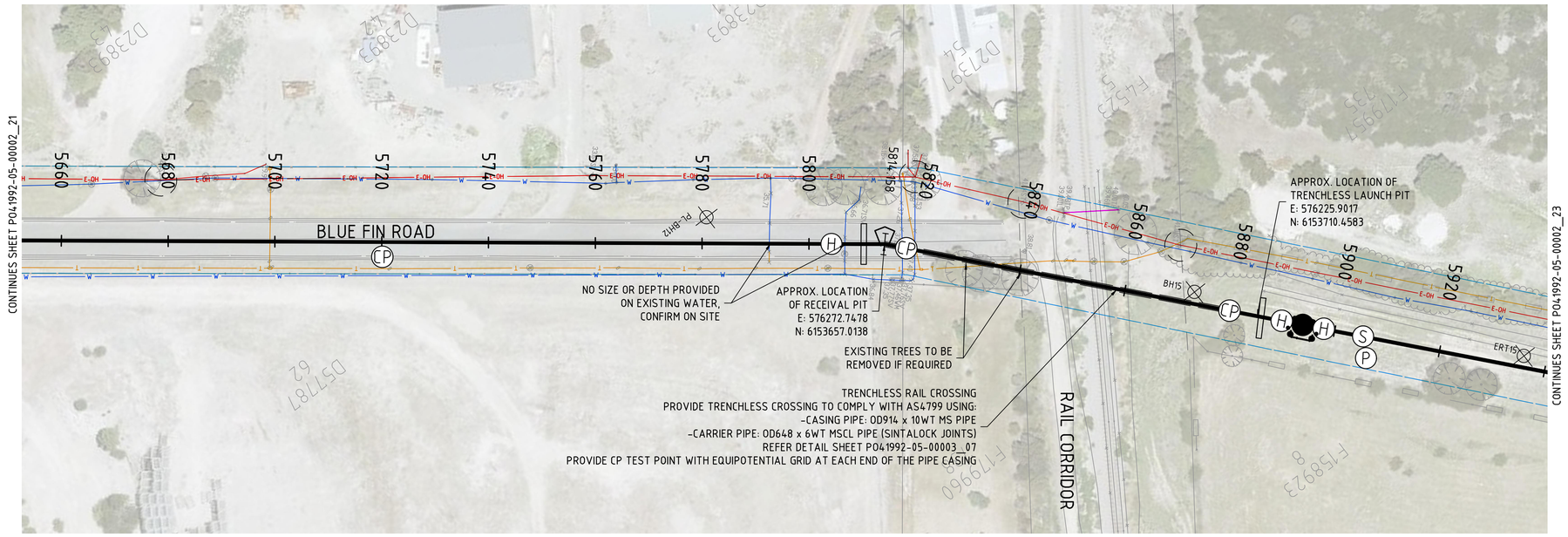

PLAN

SCALE 1:500

NOTES

1. FOR GENERAL NOTES REFER DRAWING P041992-05-00001_02.
2. PROVIDE CATHODIC PROTECTION TO SA WATER TS0440 & DRAWINGS STD-04-00001_(10,13,14 and 17).
3. GEOTECHNICAL PROPERTIES ALONG BLUE FIN ROAD BH12 - BH15 (REF: A0012-0025-GEO-REP-10002)
- FILL GENERALLY ENCOUNTERED UP TO 0.2-0.8 mBGL.
- INFERRED LOW STRENGTH LIMESTONE ENCOUNTERED BELOW FILL LEVEL (FROM 0.2-0.8 mBGL).
- GROUNDWATER NOT ENCOUNTERED.
4. GEOTECHNICAL PROPERTIES ALONG PROPER BAY ROAD BH7 - BH11 (REF: A0012-0025-GEO-REP-10002)
- FILL GENERALLY ENCOUNTERED UP TO 0.5-0.8 mBGL.
- LOOSE TO MEDIUM DENSE SAND ENCOUNTERED BELOW FILL LEVEL (FROM 0.5-0.8 mBGL).
- GROUNDWATER NOT ENCOUNTERED.
5. GEOTECHNICAL PROPERTIES ALONG GREYHOUND ROAD BH1 - BH6 (REF: A0012-0025-GEO-REP-10002)
- FILL GENERALLY ENCOUNTERED UP TO 0.15-0.6 mBGL.
- VERY LOOSE AND LOOSE SAND ENCOUNTERED BELOW FILL LEVEL (FROM 0.15-0.6 mBGL).
- LOW LYING GROUND, SHALLOW GROUNDWATER ENCOUNTERED.
6. GEOTECHNICAL PROPERTIES ALONG EASEMENT TP01 - TP07 (REF: A0012-0025-GEO-REP-10002)
- FILL GENERALLY ENCOUNTERED UP TO 0.2-0.6 mBGL.
- INFERRED LOW STRENGTH LIMESTONE ENCOUNTERED BELOW FILL LEVEL (FROM 0.2-0.6 mBGL).
- NO GROUNDWATER ENCOUNTERED. GROUNDWATER LEVEL SUBJECT TO TIDAL MOVEMENTS.
7. REFER TYPICAL CROSS SECTION 'D' FOR PIPE IN SHARED SAPN EASEMENT (P041992-05-00003_08).

LEGEND

- NEW OD648 X 6WT MSCL SINTAJOINT TRANSFER MAIN
- DN600 ISOLATION VALVE REFER DRG P041992-05-00003_04
- HYDRANT
- SCOUR
- DN1200 SCOUR PIT REFER DRG P041992-05-00003_05
- THRUST BLOCK, REFER DETAIL SHEET P041992-05-00003_02
- E-UG — EX. UNDERGROUND ELECTRICAL
- E-OH — EX. OVERHEAD ELECTRICAL
- HVE-OH — EX. H/V OVERHEAD ELEC.
- HVE-UG — EX. H/V UNDERGROUND ELEC.
- T — EX. TELECOM
- S — EX. SEWER / WASTE PIPE
- W — EX. WATER MAIN
- SW — EX. STORMWATER
- DCDB BOUNDARY
- EX. RAILWAY CORRIDOR
- BOREHOLE LOCATION
- STOBIE POLE WITH 3m EXCLUSION ZONE
- EX. VEGETATION TO BE REMOVED
- E-OH — PROPOSED OVERHEAD ELECTRICAL (PRINCIPAL SUPPLIED)
- PROPOSED POWER POLE LOCATION
- PRINCIPAL SUPPLIED LAND PARCEL BOUNDARY (2x 15m WIDE EASEMENTS)
- CP — CATHODIC PROTECTION TEST POINT, REFER GENERAL NOTES SHEET P041992-05-00001_02
- TR1 — TRANSFORMER RECTIFIER FOR ICCP ANODE (CP)

WARNING
BEWARE OF OVERHEAD AND UNDERGROUND SERVICES

THE LOCATION OF OVERHEAD AND UNDERGROUND SERVICES ARE APPROXIMATE ONLY AND THEIR EXACT POSITION SHOULD BE PROVEN ON SITE
NO GUARANTEE IS GIVEN THAT ALL SERVICES ARE SHOWN
REFER TO ASSET OWNER FOR THEIR CLEARANCE AND APPROACH REQUIREMENTS

NOT FOR CONSTRUCTION

0 2.5 5 10 15 — 1:250 (A1); 1:500 (A3)
0 5 10 20 30 — 1:500 (A1); 1:1000 (A3)

REVISION PANEL

REV	DATE	DRN	DETAILS	APR'D
0.1D	13.10.23	CSS	60% DESIGN	SW
0.1C	08.09.23	CSS	60% DRAFT DESIGN FOR REVIEW	SW
0.1B	14.07.23	CSS	30% CONCEPT DESIGN	SW
0.1A	07.06.23	CSS	30% CONCEPT DESIGN - DRAFT FOR REVIEW	SW

CURRENT REV CONTRACTOR: TONKIN / WSP — CURRENT REV PROJECT: 220258

CURRENT REV AUTHORISED 13.10.23
J.TYLER
SIGNATURE

DESIGN PANEL

DESIGNED	13.10.23	AUTHORISED	13.10.23
P.SWINCER/L.HAYSMAN		J.TYLER	
DRAWN	13.10.23	SIGNATURE	
C.SUTCLIFFE			
REVIEWED	13.10.23		
S.WHICHELO			

CONTRACTOR: TONKIN / WSP

Government of South Australia — SA Water

This drawing is the property of the SOUTH AUSTRALIAN WATER CORPORATION and shall not be copied or modified in part or in whole without authorization.

EYRE PENINSULA DESALINATION PLANT

TREATED WATER TRANSFER PIPELINE NETWORK & RETICULATION

PLAN & LONGITUDINAL PROFILE CHN5670 - 5940

A1 SHT SIZE — TOTAL SHEETS: — PROJECT No: A0012-0025 — 0.1D REVISION

MAXIMO ID: P041992

SUPERSEDES:

DRAWING NUMBER
P041992-05-00002_22

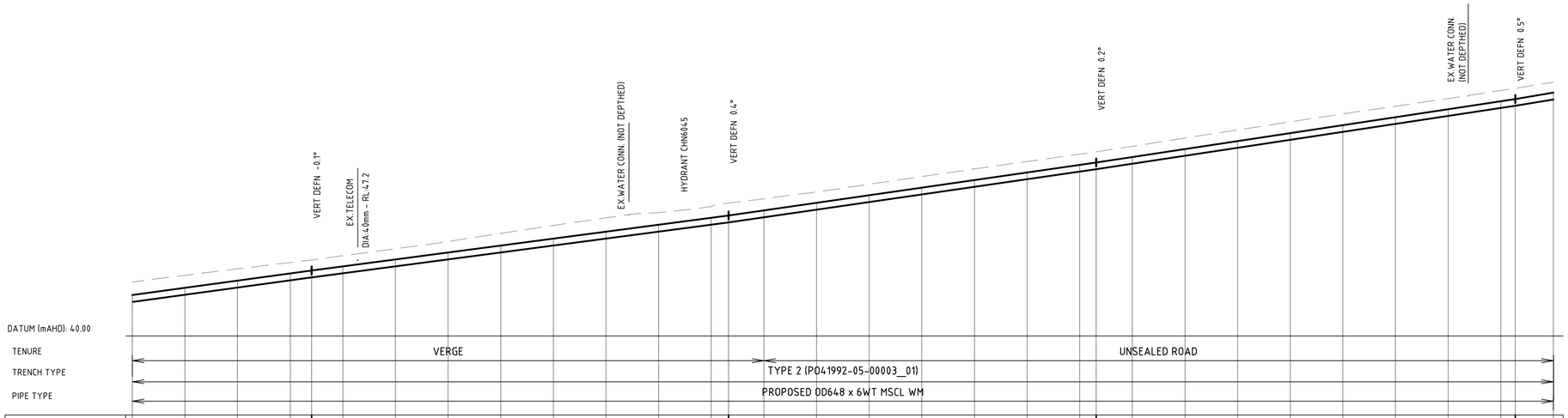

CHAINAGE (m)	DESIGN TOP (m AHD)	PIPE INVERT (m AHD)	EXISTING (m AHD)	PIPE COVER (m)
5940.000	43.898	43.256	45.138	1.240
5950.000	44.583	43.941	45.772	1.189
5960.000	45.267	44.625	46.390	1.123
5970.000	45.952	45.310	46.991	1.039
5974.083	46.231	45.589	47.231	1.000
5980.000	46.622	45.980	47.640	1.018
5990.000	47.282	46.640	48.308	1.026
6000.000	47.943	47.301	48.988	1.046
6010.000	48.603	47.961	49.763	1.160
6020.000	49.264	48.622	50.519	1.255
6030.000	49.924	49.282	51.239	1.315
6040.000	50.585	49.943	51.738	1.154
6050.000	51.245	50.603	52.316	1.071
6053.264	51.461	50.819	52.644	1.184
6060.000	51.947	51.305	53.048	1.101
6070.000	52.669	52.027	53.706	1.036
6080.000	53.392	52.750	54.431	1.039
6090.000	54.114	53.472	55.159	1.045
6100.000	54.836	54.194	55.891	1.055
6110.000	55.558	54.916	56.591	1.033
6120.000	56.281	55.639	57.288	1.008
6123.148	56.508	55.866	57.508	1.000
6130.000	57.027	56.385	58.043	1.016
6140.000	57.783	57.141	58.823	1.039
6150.000	58.540	57.898	59.593	1.052
6160.000	59.297	58.655	60.367	1.070
6170.000	60.054	59.412	61.117	1.063
6180.000	60.811	60.169	61.849	1.038
6190.000	61.568	60.926	62.593	1.025
6200.000	62.325	61.683	63.341	1.016
6202.775	62.535	61.893	63.549	1.015
6210.000	63.139	62.497	64.146	1.008

LONGITUDINAL PROFILE

HORIZONTAL SCALE 1 : 500
VERTICAL SCALE 1 : 250

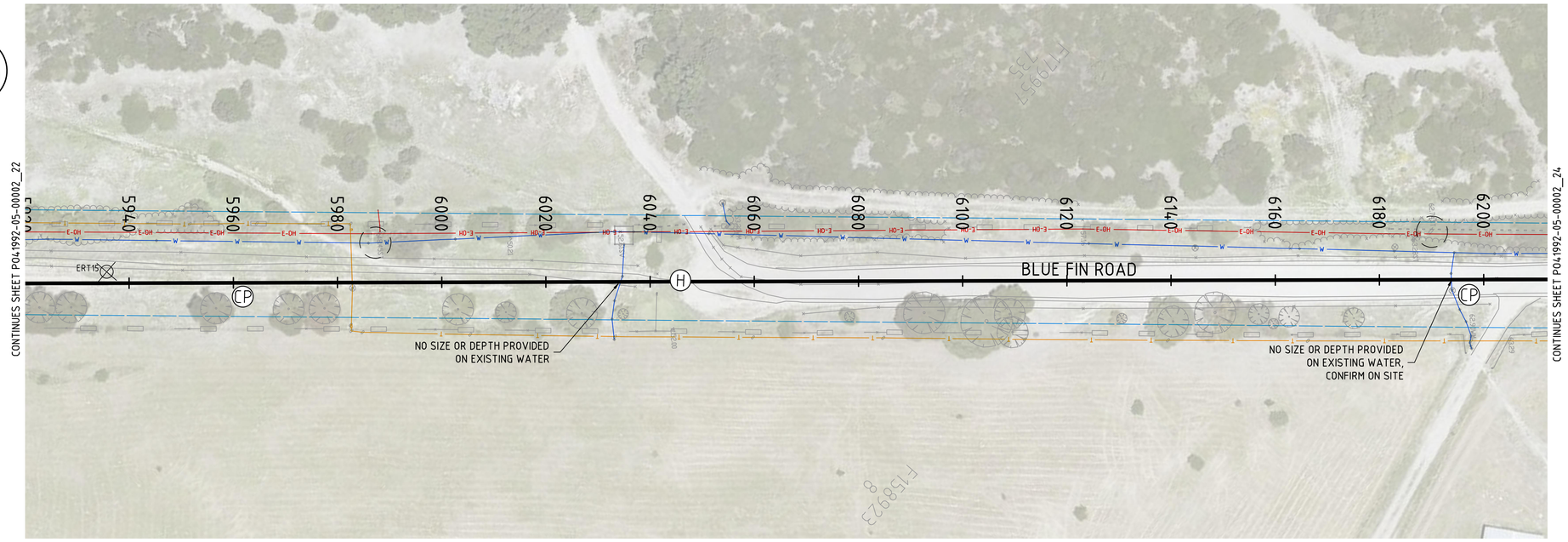

PLAN

SCALE 1:500

NOTES

1. FOR GENERAL NOTES REFER DRAWING P041992-05-00001_02.
2. PROVIDE CATHODIC PROTECTION TO SA WATER TS0440 & DRAWINGS STD-04-00001_(10,13,14 and 17).
3. GEOTECHNICAL PROPERTIES ALONG BLUE FIN ROAD BH12 - BH15 (REF: A0012-0025-GEO-REP-10002)
- FILL GENERALLY ENCOUNTERED UP TO 0.2-0.8 mBGL.
- INFERRED LOW STRENGTH LIMESTONE ENCOUNTERED BELOW FILL LEVEL (FROM 0.2-0.8 mBGL).
- GROUNDWATER NOT ENCOUNTERED.
4. GEOTECHNICAL PROPERTIES ALONG PROPER BAY ROAD BH7 - BH11 (REF: A0012-0025-GEO-REP-10002)
- FILL GENERALLY ENCOUNTERED UP TO 0.5-0.8 mBGL.
- LOOSE TO MEDIUM DENSE SAND ENCOUNTERED BELOW FILL LEVEL (FROM 0.5-0.8 mBGL).
- GROUNDWATER NOT ENCOUNTERED.
5. GEOTECHNICAL PROPERTIES ALONG GREYHOUND ROAD BH1 - BH6 (REF: A0012-0025-GEO-REP-10002)
- FILL GENERALLY ENCOUNTERED UP TO 0.15-0.6 mBGL.
- VERY LOOSE AND LOOSE SAND ENCOUNTERED BELOW FILL LEVEL (FROM 0.15-0.6 mBGL).
- LOW LYING GROUND, SHALLOW GROUNDWATER ENCOUNTERED.
6. GEOTECHNICAL PROPERTIES ALONG EASEMENT TP01 - TP07 (REF: A0012-0025-GEO-REP-10002)
- FILL GENERALLY ENCOUNTERED UP TO 0.2-0.6 mBGL.
- INFERRED LOW STRENGTH LIMESTONE ENCOUNTERED BELOW FILL LEVEL (FROM 0.2-0.6 mBGL).
- NO GROUNDWATER ENCOUNTERED. GROUNDWATER LEVEL SUBJECT TO TIDAL MOVEMENTS.
7. REFER TYPICAL CROSS SECTION 'D' FOR PIPE IN SHARED SAPN EASEMENT (P041992-05-00003_08).

LEGEND

- NEW OD648 X 6WT MSCL SINTAJOINT TRANSFER MAIN
- DN600 ISOLATION VALVE REFER DRG P041992-05-00003_04
- HYDRANT
- SCOUR
- DN1200 SCOUR PIT REFER DRG P041992-05-00003_05
- THRUST BLOCK, REFER DETAIL SHEET P041992-05-00003_02
- E-UG — EX. UNDERGROUND ELECTRICAL
- E-OH — EX. OVERHEAD ELECTRICAL
- HVE-OH — EX. H/V OVERHEAD ELEC.
- HVE-UG — EX. H/V UNDERGROUND ELEC.
- T — EX. TELECOM
- S — EX. SEWER / WASTE PIPE
- W — EX. WATER MAIN
- SW — EX. STORMWATER
- DCDB BOUNDARY
- EX. RAILWAY CORRIDOR
- BOREHOLE LOCATION
- STOBIE POLE WITH 3m EXCLUSION ZONE
- EX. VEGETATION TO BE REMOVED
- E-OH — PROPOSED OVERHEAD ELECTRICAL (PRINCIPAL SUPPLIED)
- PROPOSED POWER POLE LOCATION
- PRINCIPAL SUPPLIED LAND PARCEL BOUNDARY (2x 15m WIDE EASEMENTS)
- CP — CATHODIC PROTECTION TEST POINT, REFER GENERAL NOTES SHEET P041992-05-00001_02
- TR1 — TRANSFORMER RECTIFIER FOR ICCP ANODE (CP)

DIAL BEFORE YOU DIG
www.1100.com.au

WARNING
BEWARE OF OVERHEAD AND UNDERGROUND SERVICES

THE LOCATION OF OVERHEAD AND UNDERGROUND SERVICES ARE APPROXIMATE ONLY AND THEIR EXACT POSITION SHOULD BE PROVEN ON SITE
NO GUARANTEE IS GIVEN THAT ALL SERVICES ARE SHOWN
REFER TO ASSET OWNER FOR THEIR CLEARANCE AND APPROACH REQUIREMENTS

NOT FOR CONSTRUCTION

1:250 (A1); 1:500 (A3) — 0 2.5 5 10 15
1:500 (A1); 1:1000 (A3) — 0 5 10 20 30

REVISION PANEL

REV	DATE	DRN	DETAILS	APR'D
0.1D	13.10.23	CSS	60% DESIGN	SW
0.1C	08.09.23	CSS	60% DRAFT DESIGN FOR REVIEW	SW
0.1B	14.07.23	CSS	30% CONCEPT DESIGN	SW
0.1A	07.06.23	CSS	30% CONCEPT DESIGN - DRAFT FOR REVIEW	SW

CURRENT REV CONTRACTOR: TONKIN / WSP — CURRENT REV PROJECT: 220258

CURRENT REV AUTHORISED 13.10.23 — J.TYLER — SIGNATURE

DESIGN PANEL

DESIGNED 13.10.23 — P.SWINCER/L.HAYSMAN
DRAWN 13.10.23 — C.SUTCLIFFE
REVIEWED 13.10.23 — S.WHICHELO
AUTHORISED 13.10.23 — J.TYLER — SIGNATURE
CONTRACTOR: TONKIN / WSP

Government of South Australia — SA Water

This drawing is the property of the SOUTH AUSTRALIAN WATER CORPORATION and shall not be copied or modified in part or in whole without authorization.

EYRE PENINSULA DESALINATION PLANT

TREATED WATER TRANSFER PIPELINE
NETWORK & RETICULATION
PLAN & LONGITUDINAL PROFILE CHN5940 - 6210

A1 SHT SIZE — TOTAL SHEETS: — PROJECT No: A0012-0025 — 0.1D REVISION
MAXIMO ID: P041992
SUPERSEDES:
DRAWING NUMBER P041992-05-00002_23

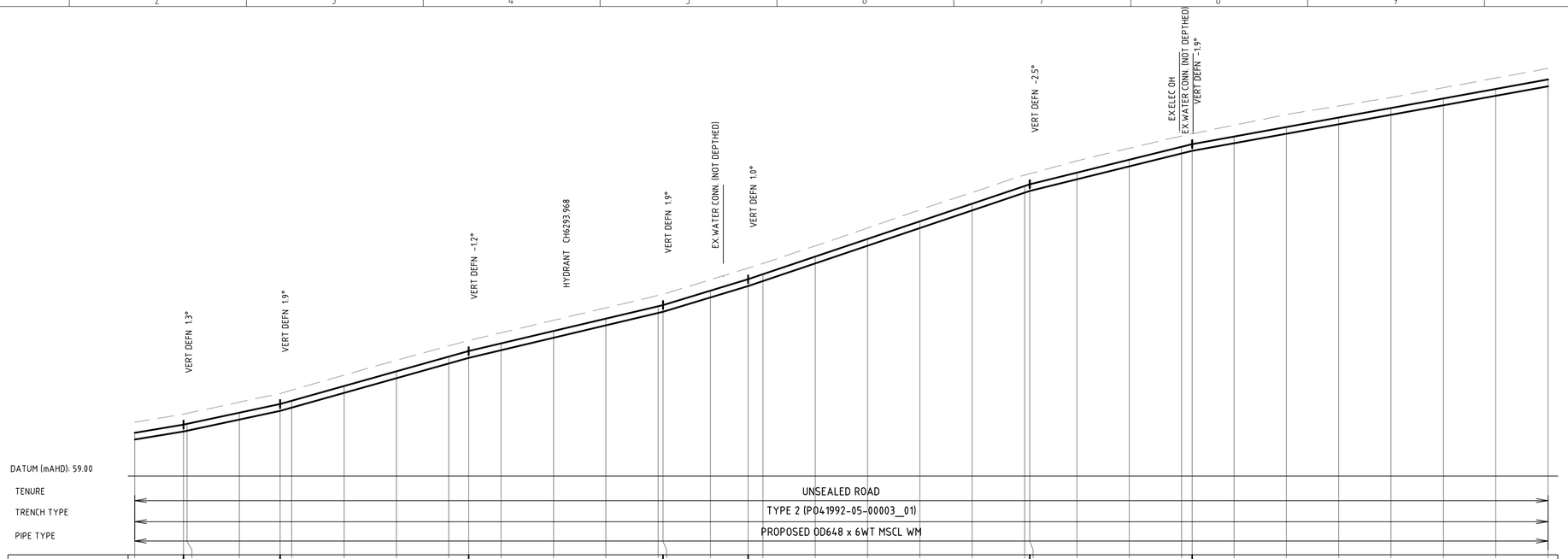

PIPE GRADIENT	G=8.364% L=16.548	G=10.686% L=18.445	G=14.002% L=36.061	G=11.854% L=37.086	G=15.143% L=16.262	G=16.870% L=53.803	G=12.345% L=31.027	G=9.068% L=75.473

DESIGN TOP (m AHD)	63.139	63.918 63.991	65.059	65.889 66.202	67.602	69.002	70.402	70.938	71.670	72.855	74.041	75.226 75.334	76.710	77.797	78.213	79.960	81.647	83.334	85.021	86.708 86.873	87.987	89.221	90.456 90.704	91.428	92.335	93.242	94.149	95.056	95.962	96.869
PIPE INVERT (m AHD)	62.497	63.276 63.349	64.417	65.247 65.560	66.960	68.360	69.760	70.296	71.028	72.213	73.399	74.584 74.692	76.068	77.155 77.631	78.318	79.318	81.005	82.692	84.379	86.066 86.231	87.345	88.579	89.814 90.061	90.786	91.693	92.600	93.507	94.414	95.320	96.227
EXISTING (m AHD)	64.146	64.918 64.991	66.060	66.889 67.209	68.642	70.056	71.435	71.960	72.694	73.883	75.066	76.264 76.315	77.759	78.864	79.301	80.979	82.693	84.424	86.088	87.740 87.873	89.093	90.308	91.174 91.704	92.503	93.521	94.338	95.157	96.083	97.013	97.924
PIPE COVER (m)	1.008	1.000 1.000	1.001	1.000 1.007	1.041	1.054	1.033	1.022	1.024	1.027	1.025	1.038 1.040	1.049	1.067	1.028	1.019	1.046	1.090	1.067	1.032 1.000	1.106	1.087	1.018 1.000	1.075	1.186	1.096	1.008	1.027	1.050	1.054
CHAINAGE (m)	6210.000	6219.322 6220.000	6230.000	6237.767 6240.000	6250.000	6260.000	6270.000	6273.828	6280.000	6290.000	6300.000	6310.000 6310.914	6320.000	6327.176 6330.000	6330.000	6340.000	6350.000	6360.000	6370.000	6380.000 6380.980	6390.000	6400.000	6410.000 6412.007	6420.000	6430.000	6440.000	6450.000	6460.000	6470.000	6480.000

LONGITUDINAL PROFILE

HORIZONTAL SCALE 1 : 500
VERTICAL SCALE 1 : 250

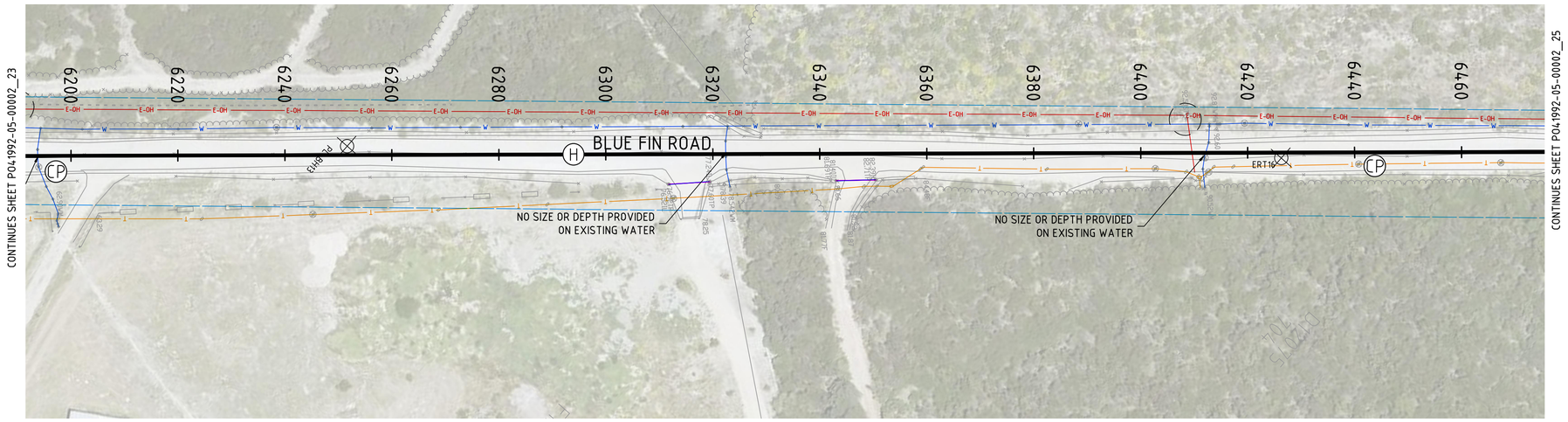

PLAN

SCALE 1:500

NOTES

1. FOR GENERAL NOTES REFER DRAWING P041992-05-00001_02.
2. PROVIDE CATHODIC PROTECTION TO SA WATER TS0440 & DRAWINGS STD-04-00001_(10,13,14 and 17).
3. GEOTECHNICAL PROPERTIES ALONG BLUE FIN ROAD BH12 - BH15 (REF: A0012-0025-GEO-REP-10002)
- FILL GENERALLY ENCOUNTERED UP TO 0.2-0.8 mBGL.
- INFERRED LOW STRENGTH LIMESTONE ENCOUNTERED BELOW FILL LEVEL (FROM 0.2-0.8 mBGL).
- GROUNDWATER NOT ENCOUNTERED.
4. GEOTECHNICAL PROPERTIES ALONG PROPER BAY ROAD BH7 - BH11 (REF: A0012-0025-GEO-REP-10002)
- FILL GENERALLY ENCOUNTERED UP TO 0.5-0.8 mBGL.
- LOOSE TO MEDIUM DENSE SAND ENCOUNTERED BELOW FILL LEVEL (FROM 0.5-0.8 mBGL).
- GROUNDWATER NOT ENCOUNTERED.
5. GEOTECHNICAL PROPERTIES ALONG GREYHOUND ROAD BH1 - BH6 (REF: A0012-0025-GEO-REP-10002)
- FILL GENERALLY ENCOUNTERED UP TO 0.15-0.6 mBGL.
- VERY LOOSE AND LOOSE SAND ENCOUNTERED BELOW FILL LEVEL (FROM 0.15-0.6 mBGL).
- LOW LYING GROUND, SHALLOW GROUNDWATER ENCOUNTERED.
6. GEOTECHNICAL PROPERTIES ALONG EASEMENT TP01 - TP07 (REF: A0012-0025-GEO-REP-10002)
- FILL GENERALLY ENCOUNTERED UP TO 0.2-0.6 mBGL.
- INFERRED LOW STRENGTH LIMESTONE ENCOUNTERED BELOW FILL LEVEL (FROM 0.2-0.6 mBGL).
- NO GROUNDWATER ENCOUNTERED. GROUNDWATER LEVEL SUBJECT TO TIDAL MOVEMENTS.
7. REFER TYPICAL CROSS SECTION 'D' FOR PIPE IN SHARED SAPN EASEMENT (P041992-05-00003_08).

LEGEND

- NEW OD648 X 6WT MSCL SINTAJOINT TRANSFER MAIN
- DN600 ISOLATION VALVE REFER DRG P041992-05-00003_04
- HYDRANT
- SCOUR
- DN1200 SCOUR PIT REFER DRG P041992-05-00003_05
- THRUST BLOCK, REFER DETAIL SHEET P041992-05-00003_02
- E-UG — EX. UNDERGROUND ELECTRICAL
- E-OH — EX. OVERHEAD ELECTRICAL
- HVE-OH — EX. H/V OVERHEAD ELEC.
- HVE-UG — EX. H/V UNDERGROUND ELEC.
- T — EX. TELECOM
- S — EX. SEWER / WASTE PIPE
- W — EX. WATER MAIN
- SW — EX. STORMWATER
- DCDB BOUNDARY
- EX. RAILWAY CORRIDOR
- BOREHOLE LOCATION
- STOBIE POLE WITH 3m EXCLUSION ZONE
- EX. VEGETATION TO BE REMOVED
- E-OH — PROPOSED OVERHEAD ELECTRICAL (PRINCIPAL SUPPLIED)
- PROPOSED POWER POLE LOCATION
- PRINCIPAL SUPPLIED LAND PARCEL BOUNDARY (2x 15m WIDE EASEMENTS)
- CP — CATHODIC PROTECTION TEST POINT, REFER GENERAL NOTES SHEET P041992-05-00001_02
- TR1 — TRANSFORMER RECTIFIER FOR ICCP ANODE (CP)

DIAL BEFORE YOU DIG
www.1100.com.au

WARNING
BEWARE OF OVERHEAD AND UNDERGROUND SERVICES

THE LOCATION OF OVERHEAD AND UNDERGROUND SERVICES ARE APPROXIMATE ONLY AND THEIR EXACT POSITION SHOULD BE PROVEN ON SITE
NO GUARANTEE IS GIVEN THAT ALL SERVICES ARE SHOWN
REFER TO ASSET OWNER FOR THEIR CLEARANCE AND APPROACH REQUIREMENTS

NOT FOR CONSTRUCTION

0 2.5 5 10 15 — 1:250 (A1); 1:500 (A3)
0 5 10 20 30 — 1:500 (A1); 1:1000 (A3)

REVISION PANEL

REV	DATE	DRN	DETAILS	APR'D
0.1D	13.10.23	CSS	60% DESIGN	SW
0.1C	08.09.23	CSS	60% DRAFT DESIGN FOR REVIEW	SW
0.1B	14.07.23	CSS	30% CONCEPT DESIGN	SW
0.1A	07.06.23	CSS	30% CONCEPT DESIGN - DRAFT FOR REVIEW	SW

CURRENT REV CONTRACTOR: TONKIN / WSP
CURRENT REV PROJECT: 220258

CURRENT REV AUTHORISED 13.10.23
J.TYLER
SIGNATURE

DESIGN PANEL

DESIGNED	13.10.23	AUTHORISED	13.10.23
P.SWINCER/L.HAYSMAN		J.TYLER	
DRAWN	13.10.23	SIGNATURE	
C.SUTCLIFFE			
REVIEWED	13.10.23		
S.WHICHELO			

CONTRACTOR: TONKIN / WSP

Government of South Australia
SA Water

This drawing is the property of the SOUTH AUSTRALIAN WATER CORPORATION and shall not be copied or modified in part or in whole without authorization.

EYRE PENINSULA DESALINATION PLANT

TREATED WATER TRANSFER PIPELINE
NETWORK & RETICULATION
PLAN & LONGITUDINAL PROFILE CHN6210 - 6480

A1 SHT SIZE
TOTAL SHEETS:
PROJECT No: A0012-0025
0.1D REVISION
MAXIMO ID: P041992
SUPERSEDES:
DRAWING NUMBER
P041992-05-00002_24

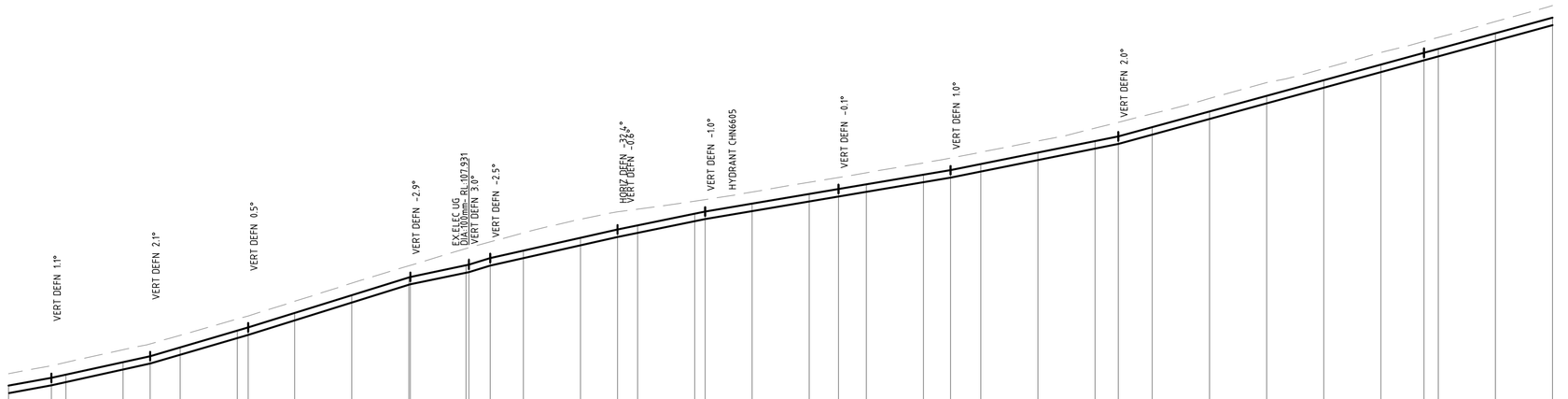

DATUM (mAHD): 93.00

TENURE: UNSEALED ROAD

TRENCH TYPE: TYPE 2 (P041992-05-00003_01)

PIPE TYPE: PROPOSED OD648 x 6WT MSCL WM

| | | |

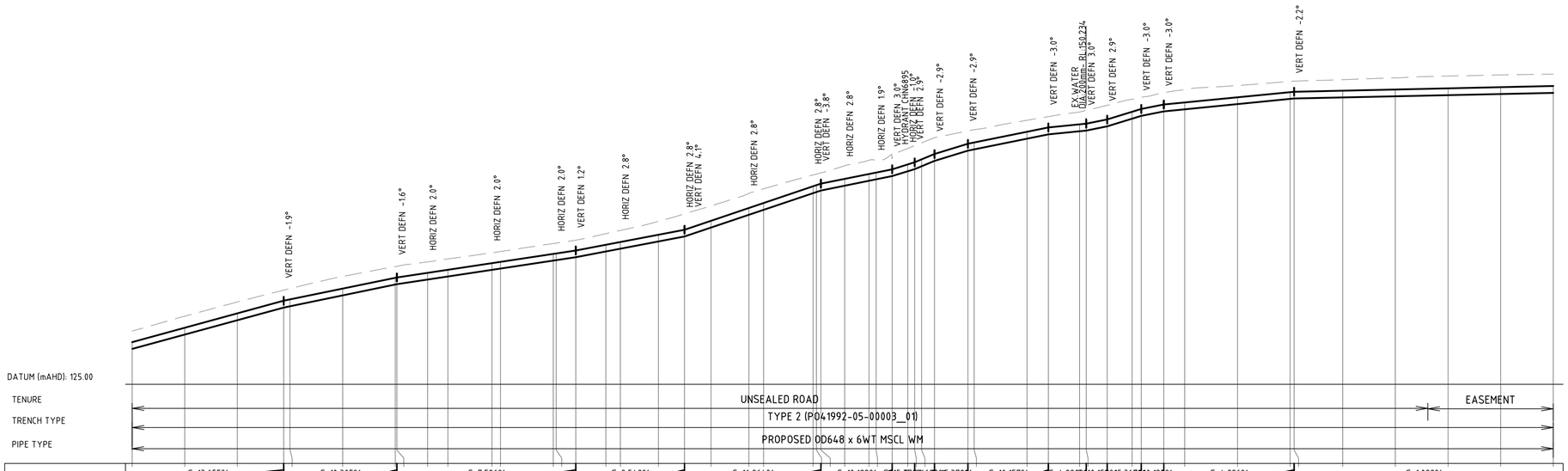
VERT DEFN -1.9°
VERT DEFN -1.6°
HORIZ DEFN 2.0°
HORIZ DEFN 2.0°
HORIZ DEFN 2.0°
VERT DEFN 1.2°
HORIZ DEFN 2.8°
HORIZ DEFN 2.8°
VERT DEFN 4.1°
HORIZ DEFN 2.8°
HORIZ DEFN 2.8°
HORIZ DEFN 2.8°
VERT DEFN -3.8°
HORIZ DEFN 1.9°
VERT DEFN 3.0°
HYDRANT CHN6695
HORIZ DEFN -3.9°
VERT DEFN 2.9°
VERT DEFN -2.9°
VERT DEFN -2.9°
VERT DEFN -3.0°
EX.WATER
EX.ADJUST. RL150.234
VERT DEFN 3.0°
VERT DEFN 2.9°
VERT DEFN -3.0°
VERT DEFN -3.0°
VERT DEFN -2.2°
DATUM (mAHD): 125.00
TENURE
UNSEALED ROAD
EASEMENT
TRENCH TYPE
TYPE 2 (P041992-05-00003_01)
PIPE TYPE
PROPOSED OD648 x 6WT MSCL WM

| | | |

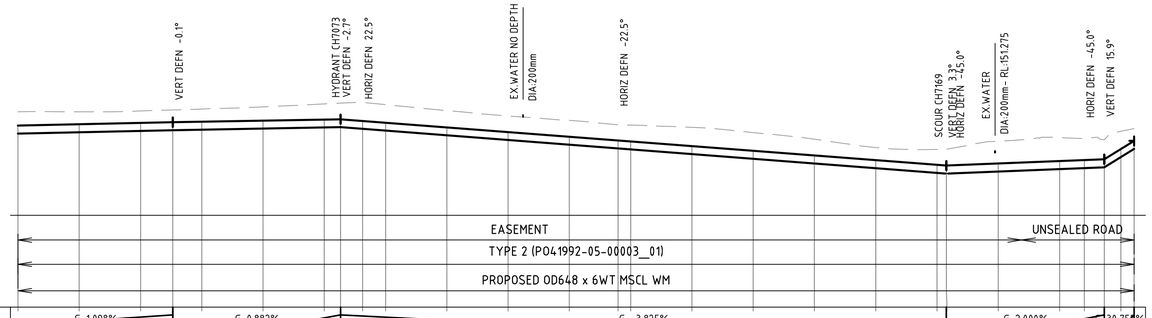

PIPE GRADIENT	G=-1.098% L=74.516	G=0.882% L=27.346	G=-3.825% L=98.888	G=2.000% L=25.777	G=30.759% L=4.861

CHAINAGE (m)	DESIGN TOP (m AHD)	PIPE INVERT (m AHD)	EXISTING (m AHD)	PIPE COVER (m)
7020.000	153.317	152.675	154.451	1.133
7030.000	153.427	152.785	154.445	1.018
7040.000	153.537	152.895	154.515	0.978
7045.282	153.595	152.953	154.595	1.000
7050.000	153.637	152.995	154.667	1.030
7060.000	153.725	153.083	154.847	1.122
7070.000	153.813	153.171	155.081	1.268
7072.628	153.836	153.194	155.147	1.311
7076.231	153.698	153.056	155.214	1.515
7080.000	153.554	152.912	155.025	1.470
7090.000	153.172	152.530	154.543	1.371
7100.000	152.789	152.147	154.102	1.313
7110.000	152.407	151.765	153.738	1.332
7117.928	152.104	151.462	153.376	1.272
7120.000	152.024	151.382	153.354	1.330
7130.000	151.642	151.000	153.174	1.532
7140.000	151.259	150.617	152.752	1.492
7150.000	150.877	150.235	152.205	1.328
7160.000	150.494	149.852	151.525	1.030
7170.000	150.112	149.470	151.374	1.262
7171.516	150.054	149.412	151.384	1.330
7180.000	150.224	149.582	152.048	1.824
7190.000	150.424	149.782	152.340	1.916
7194.050	150.505	149.863	152.263	1.758
7197.294	150.570	149.928	152.155	1.586
7200.000	151.402	150.760	152.855	1.453
7202.161	152.066		153.066	1.000

LONGITUDINAL PROFILE

HORIZONTAL SCALE 1 : 500

VERTICAL SCALE 1 : 250

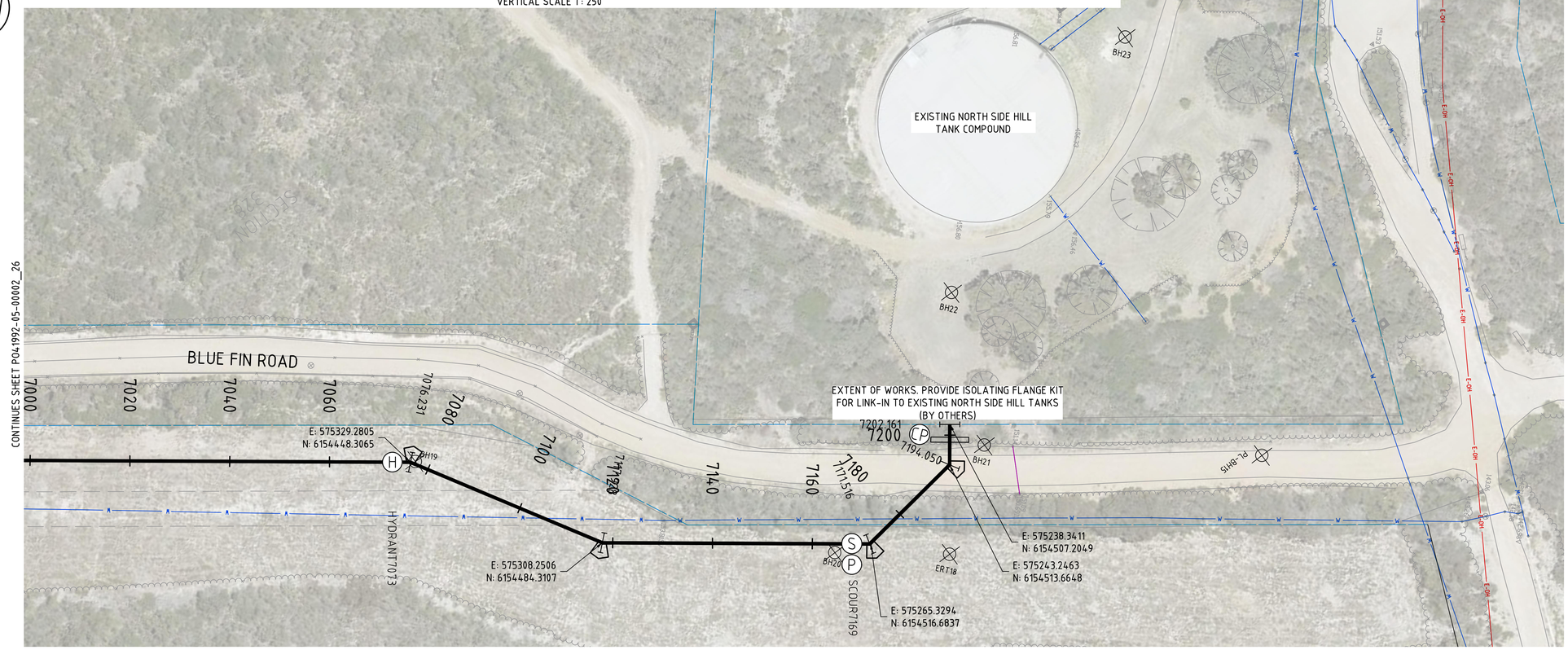

PLAN

SCALE 1:500

NOTES

1. FOR GENERAL NOTES REFER DRAWING P041992-05-00001_02.
2. PROVIDE CATHODIC PROTECTION TO SA WATER TS0440 & DRAWINGS STD-04-00001_(10,13,14 and 17).
3. GEOTECHNICAL PROPERTIES ALONG BLUE FIN ROAD BH12 - BH15 (REF: A0012-0025-GEO-REP-10002)
- FILL GENERALLY ENCOUNTERED UP TO 0.2-0.8 mBGL.
- INFERRED LOW STRENGTH LIMESTONE ENCOUNTERED BELOW FILL LEVEL (FROM 0.2-0.8 mBGL).
- GROUNDWATER NOT ENCOUNTERED.
4. GEOTECHNICAL PROPERTIES ALONG PROPER BAY ROAD BH7 - BH11 (REF: A0012-0025-GEO-REP-10002)
- FILL GENERALLY ENCOUNTERED UP TO 0.5-0.8 mBGL.
- LOOSE TO MEDIUM DENSE SAND ENCOUNTERED BELOW FILL LEVEL (FROM 0.5-0.8 mBGL).
- GROUNDWATER NOT ENCOUNTERED.
5. GEOTECHNICAL PROPERTIES ALONG GREYHOUND ROAD BH1 - BH6 (REF: A0012-0025-GEO-REP-10002)
- FILL GENERALLY ENCOUNTERED UP TO 0.15-0.6 mBGL.
- VERY LOOSE AND LOOSE SAND ENCOUNTERED BELOW FILL LEVEL (FROM 0.15-0.6 mBGL).
- LOW LYING GROUND, SHALLOW GROUNDWATER ENCOUNTERED.
6. GEOTECHNICAL PROPERTIES ALONG EASEMENT TP01 - TP07 (REF: A0012-0025-GEO-REP-10002)
- FILL GENERALLY ENCOUNTERED UP TO 0.2-0.6 mBGL.
- INFERRED LOW STRENGTH LIMESTONE ENCOUNTERED BELOW FILL LEVEL (FROM 0.2-0.6 mBGL).
- NO GROUNDWATER ENCOUNTERED. GROUNDWATER LEVEL SUBJECT TO TIDAL MOVEMENTS.
7. REFER TYPICAL CROSS SECTION 'D' FOR PIPE IN SHARED SAPN EASEMENT (P041992-05-00003_08).

LEGEND

- NEW OD648 X 6WT MSCL SINTAJOINT TRANSFER MAIN
- DN600 ISOLATION VALVE REFER DRG P041992-05-00003_04
- HYDRANT
- SCOUR
- DN1200 SCOUR PIT REFER DRG P041992-05-00003_05
- THRUST BLOCK, REFER DETAIL SHEET P041992-05-00003_02
- EX. UNDERGROUND ELECTRICAL
- EX. OVERHEAD ELECTRICAL
- EX. H/V OVERHEAD ELEC.
- EX. H/V UNDERGROUND ELEC.
- EX. TELECOM
- EX. SEWER / WASTE PIPE
- EX. WATER MAIN
- EX. STORMWATER
- DCDB BOUNDARY
- EX. RAILWAY CORRIDOR
- BOREHOLE LOCATION
- STOBIE POLE WITH 3m EXCLUSION ZONE
- EX. VEGETATION TO BE REMOVED
- PROPOSED OVERHEAD ELECTRICAL (PRINCIPAL SUPPLIED)
- PROPOSED POWER POLE LOCATION
- PRINCIPAL SUPPLIED LAND PARCEL BOUNDARY (2x 15m WIDE EASEMENTS)
- CATHODIC PROTECTION TEST POINT, REFER GENERAL NOTES SHEET P041992-05-00001_02
- TR1 TRANSFORMER RECTIFIER FOR ICCP ANODE (CP)

DIAL BEFORE YOU DIG
www.1100.com.au

WARNING
BEWARE OF OVERHEAD AND UNDERGROUND SERVICES

THE LOCATION OF OVERHEAD AND UNDERGROUND SERVICES ARE APPROXIMATE ONLY AND THEIR EXACT POSITION SHOULD BE PROVEN ON SITE
NO GUARANTEE IS GIVEN THAT ALL SERVICES ARE SHOWN
REFER TO ASSET OWNER FOR THEIR CLEARANCE AND APPROACH REQUIREMENTS

NOT FOR CONSTRUCTION

0 2.5 5 10 15 — 1:250 (A1); 1:500 (A3)
0 5 10 20 30 — 1:500 (A1); 1:1000 (A3)

REVISION PANEL

REV	DATE	DRN	DETAILS	APR'D
0.1D	13.10.23	CSS	60% DESIGN	SW
0.1C	08.09.23	CSS	60% DRAFT DESIGN FOR REVIEW	SW
0.1B	14.07.23	CSS	30% CONCEPT DESIGN	SW
0.1A	07.06.23	CSS	30% CONCEPT DESIGN - DRAFT FOR REVIEW	SW

CURRENT REV CONTRACTOR: TONKIN / WSP CURRENT REV PROJECT: 220258

CURRENT REV AUTHORISED 13.10.23
J.TYLER
SIGNATURE

DESIGN PANEL

DESIGNED	13.10.23	AUTHORISED	13.10.23
P.SWINCER/L.HAYSMAN		J.TYLER	
DRAWN	13.10.23	SIGNATURE	
C.SUTCLIFFE			
REVIEWED	13.10.23		
S.WHICHELO			

CONTRACTOR: TONKIN / WSP

Government of South Australia
SA Water

This drawing is the property of the SOUTH AUSTRALIAN WATER CORPORATION and shall not be copied or modified in part or in whole without authorization.

EYRE PENINSULA DESALINATION PLANT

TREATED WATER TRANSFER PIPELINE NETWORK & RETICULATION

PLAN & LONGITUDINAL PROFILE CHN7020 - END

A1 SHT SIZE | TOTAL SHEETS: | PROJECT No: A0012-0025 | 0.1D REVISION

MAXIMO ID: P041992

SUPERSEDES:

DRAWING NUMBER
P041992-05-00002_27

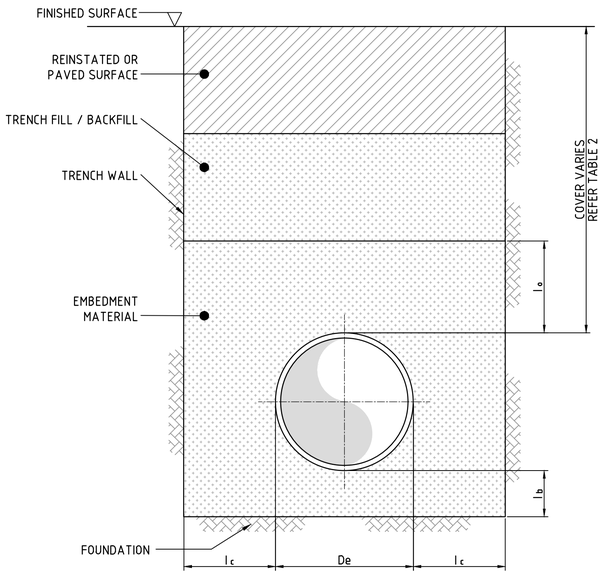

TRENCH TERMINOLOGY (GENERIC)

REFER TABLE 1

N.T.S.

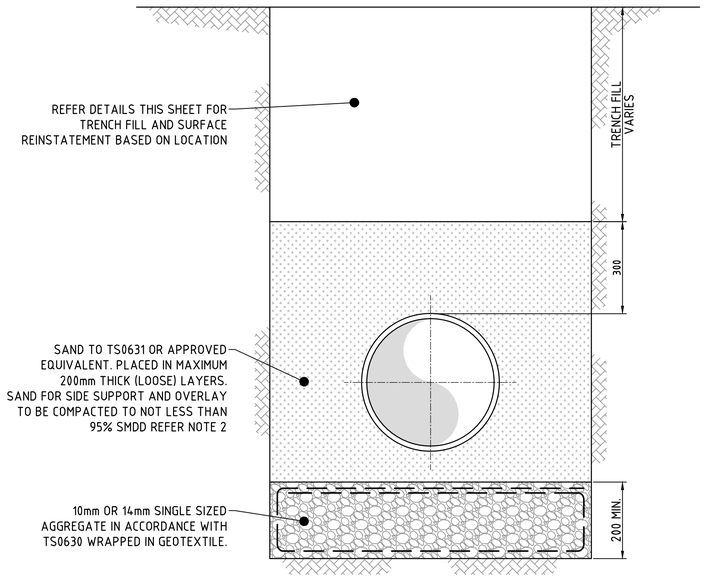

TRENCH BEDDING IN GROUND WATER CONDITIONS

N.T.S.

NOTES:

1. EMBEDMENT NOTES:-
   - 1.1. FOR SPECIFICATION OF PROVISION AND COMPACTION OF EMBEDMENT MATERIAL FOR PIPES UP TO DN375 REFER TO SA WATER TS0631, WSCM DRAWINGS 4005-30003 OR SCM DRAWINGS 4005-20003 FOR HIGH GROUNDWATER LEVELS.
   - 1.2. SMDD = STANDARD MAXIMUM DRY DENSITY TO AS 1289.5.1.1 = STANDARD COMPACTION
   - 1.3. MMDD = MODIFIED MAXIMUM DRY DENSITY TO AS 1289.5.2.1. = MODIFIED COMPACTION
   - 1.4. EMBEDMENT SAND TO SATISFY AS 2566.2 AND TS0631 IN THE PREVENTION OF EMBEDMENT ZONE SOIL PARTICLE MIGRATION.
2. OVER-EXCAVATION:-
   - 2.1. WHERE THE MATERIAL AT THE DESIGN DEPTH OF THE TRENCH IS VERY SOFT (<50kPa), THE TRENCH SHALL BE OVER-EXCAVATED A MINIMUM OF 200mm TO SUITABLE MATERIAL TO PROVIDE A FIRM BASE. IT SHALL BE BACKFILLED TO THE DESIGN DEPTH USING SAND TO TS0631 OR APPROVED EQUIVALENT COMPACTED TO 100% SMDD, PRIOR TO BEDDING PLACEMENT.
3. GEOTEXTILE PILLOW AS SHOWN ON SCM DRAWING 4005-20003-04:-
   - 3.1. GEOTEXTILE PILLOW DETAIL TO BE USED FOR PIPE INSTALLATION IN SOFT AND WET GROUND CONDITIONS.
   - 3.2. GEOTEXTILE FABRIC TO BE BIDIM A24 OR EQUIVALENT.
4. AGGREGATES:- (AGGREGATES DETAIL TO BE USED WHERE GROUNDWATER IS ABOVE TRENCH BOTTOM)
   - 4.1. AGGREGATE SHALL BE COMPLIANT WITH AS/NZS 2566.2 TABLE G2 AND TS0630.
   - 4.2. AGGREGATE EMBEDMENT TO BE UNDERTAKEN IN ACCORDANCE WITH SA WATER DRAWING 4005-20003-04.
   - 4.3. BARRIER GEOTEXTILE LAYER TO FULLY ENCLOSE THE AGGREGATE SCREENINGS. GEOTEXTILE TO BE BIDIM A24 OR EQUIVALENT.
   - 4.4. AGGREGATE SHALL BE PLACED IN SLOW, EVEN MANNER AND VIBRATED THROUGH IN LAYERS NOT EXCEEDING 200mm. ENSURE EACH LAYER IS VIBRATED THROUGHOUT ITS FULL DEPTH.

TABLE 1 - TRENCH DIMENSIONS

	450<De<900
MIN l_o	300
MIN l_b	150
MIN l_c	200

l_o = OVERLAY
l_b = BEDDING
l_c = SIDE SUPPORT
De = PIPE OD (mm)

TABLE 2 - PIPE COVER

LOCATION	MINIMUM COVER (mm) 450<De<900
UNSEALED ROADS AND SHOULDERS	1000
SEALED ROADS AND SHOULDERS	1000

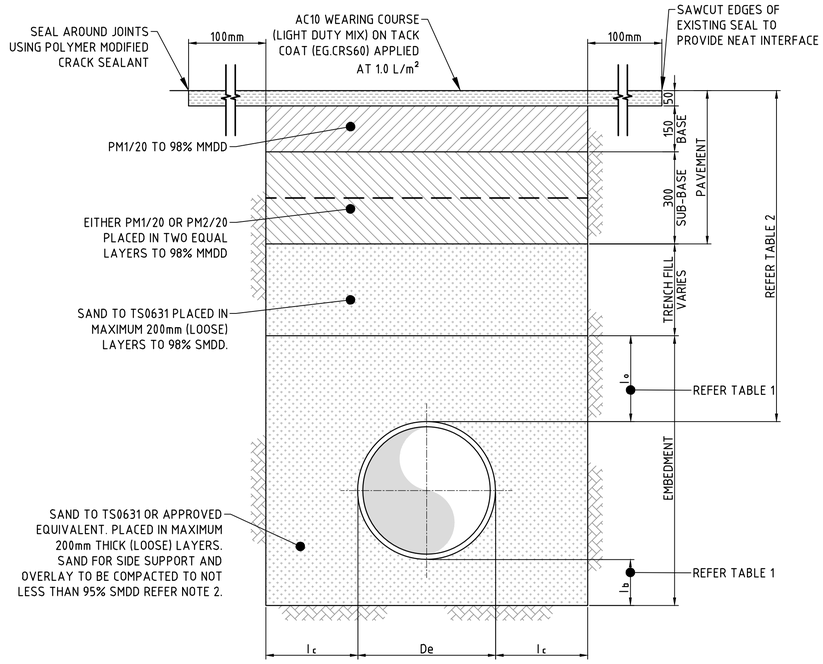

TYPE 1 STANDARD TRENCH DETAILS FOR SEALED (ASPHALT) COUNCIL AND SA WATER ROADS

N.T.S.

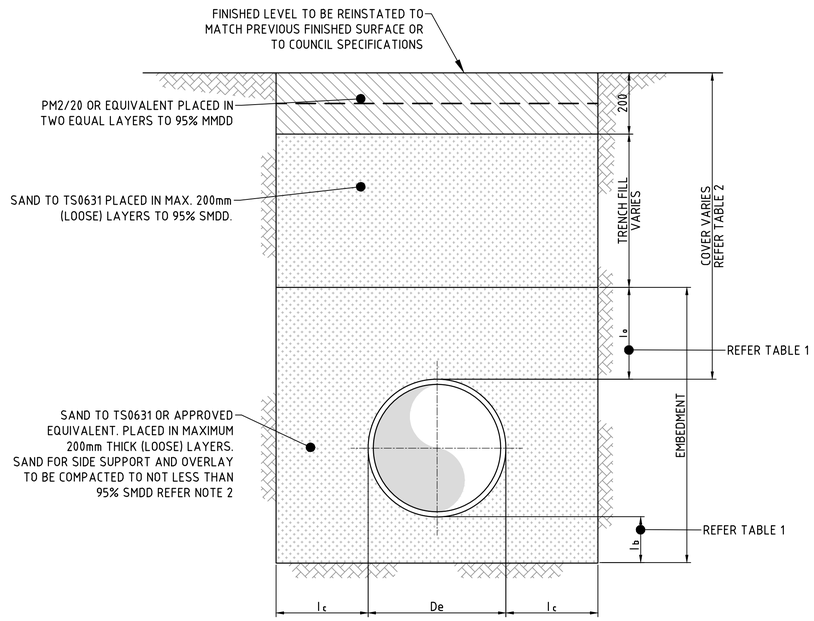

TYPE 2 STANDARD TRENCH DETAILS FOR COUNCIL & SA WATER UNSEALED ROADS / DIRT TRACKS OR HARD SHOULDERS

N.T.S.

NOT FOR CONSTRUCTION

REVISION PANEL

REV	DATE	DRN	DETAILS	APR'D
0.1D	13.10.23	CSS	60% DESIGN	SW
0.1C	08.09.23	JW	60% DRAFT DESIGN FOR REVIEW	SW
0.1B	14.07.23	CSS	30% CONCEPT DESIGN	SW
0.1A	07.06.23	CSS	30% CONCEPT DESIGN - DRAFT FOR REVIEW	SW

CURRENT REV CONTRACTOR: TONKIN / WSP CURRENT REV PROJECT: 220258

CURRENT REV AUTHORISED 13.10.23 J.TYLER SIGNATURE

DESIGN PANEL

DESIGNED	13.10.23	AUTHORISED	13.10.23
P.SWINCER/L.HAYSMAN		J.TYLER	
DRAWN	13.10.23	SIGNATURE	
C.SUTCLIFFE			
REVIEWED	13.10.23		
S.WHICHELO			

CONTRACTOR: TONKIN & WSP

Government of South Australia

SA Water

This drawing is the property of the SOUTH AUSTRALIAN WATER CORPORATION and shall not be copied or modified in part or in whole without authorization.

EYRE PENINSULA DESALINATION PLANT

TREATED WATER TRANSFER PIPELINE NETWORK & RETICULATION TRENCH DETAILS

A1 SHT SIZE | TOTAL SHEETS: 11 | PROJECT No: A0012-0025 | 0.1D REVISION

MAXIMO ID: P041992

SUPERSEDES:

DRAWING NUMBER P041992-05-00003__01

THRUST BLOCK NOTES:

GENERAL NOTES

1. AHBP - ALLOWABLE HORIZONTAL BEARING PRESSURE OF INSITU SOIL.
2. REFER TO SEPARATE GEOTECHNICAL REPORT A0012-0025-GEO-REP-10001.
3. DESIGN OF THRUST BLOCK MAY NEED TO BE ALTERED FOLLOWING DETAILED GEOTECHNICAL TESTING / ASSESSMENT OF SITE AND THE PROGRESSION OF DETAILED DESIGN.
4. COVER TO THRUST BLOCKS VARY, TO BE CONFIRMED IN FUTURE DETAILED DESIGN.

CONCRETE AND REINFORCEMENT

1. CONCRETE GRADE TO BE MINIMUM S40 IN ACCORDANCE WITH TS0710 AND AS1379.
2. THRUST BLOCK TO BE CAST AGAINST A CLEAN FACE OF UNDISTURBED NATIVE SOIL. IF NOT ABLE TO POUR AGAINST UNDISTURBED CLEAN FACE, SA WATER TO BE CONSULTED FOR APPROVAL OF PROPOSED METHODOLOGY.
3. THRUST BLOCK NOT TO INTERFERE WITH EXISTING SERVICES. THRUST BLOCK BEARING FACES TO BE A MINIMUM 3.0m CLEARANCE FROM EXISTING SERVICES TRENCHES, POWER POLES, STRUCTURES OR OTHER FEATURES INCLUDING OPEN CHANNELS UNLESS NOTED OTHERWISE.
4. THE PIPE SHALL BE SUPPORTED/ANCHORED TO PREVENT FLOTATION/ROTATION/DISPLACEMENT DURING CONCRETE POURING. IF CONSTRUCTION INVOLVES MULTIPLE POURS, ENSURE FINISH OF PREVIOUS POUR IS HEAVILY SCABBLED PRIOR TO INITIAL SET TO ENSURE ADEQUATE BOND TO SUBSEQUENT POUR.
5. THE PIPE SHALL BE SUPPORTED TO ENSURE THE CONCRETE CAN EASILY FLOW AROUND THE PIPE.
6. CONCRETE INSTALLATION SHALL NOT RESULT IN THE ENCASEMENT OF ANY RUBBER RING JOINTS.
7. THE LENGTH OF CONCRETE BLOCK SHALL EXTEND PAST THE END MITRES BY AT LEAST 500mm.
8. BONDS CABLES SHALL BE INSTALLED ACROSS ALL RUBBER RING JOINTS IN ACCORDANCE WITH SA WATER STANDARD DRAWING 4004-00001-50 & 4004-00001-22.

TRUNK MAIN HORIZONTAL THRUST BLOCK TABLE

PIPE OD (mm)	DESIGN PRESSURE (m HEAD)	ASSUMED DESIGN AHBP (kPa)	BEND ANGLE	LENGTH OF BLOCK L(m)	WIDTH OF BLOCK W(m)	HEIGHT OF BLOCK H(m)
648	250	50	90	11.5	3.0	2.0
			45	6.2	2.5	2.0
			22.5	3.2	2.0	2.0
			11.25	1.6	2.0	2.0
			6	1.2	1.5	1.5
		75	90	10.4	3.0	1.5
			45	5.6	2.5	1.5
			22.5	3.0	1.5	1.5
			11.25	1.6	1.5	1.5
			6	1.4	1.5	1.2
		100	90	7.8	3.0	1.5
			45	4.2	2.5	1.5
			22.5	2.2	2.0	1.5
			11.25	1.6	1.5	1.2
			6	1.2	1.5	1.2

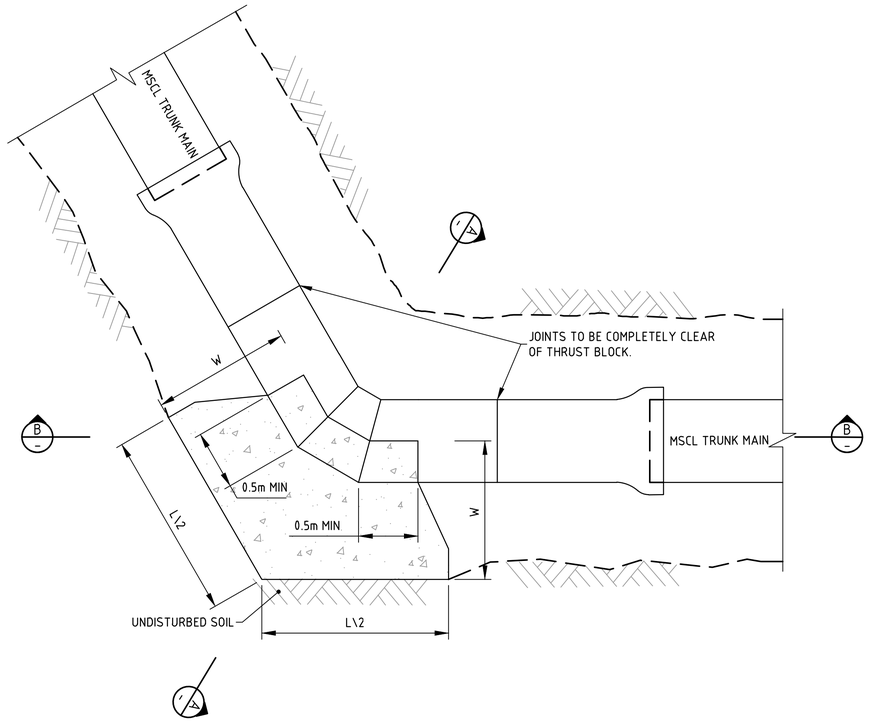

TYPICAL THRUST BLOCK FOR HORIZONTAL MSCL BENDS
(≤45° BENDS AT ANCHOR BLOCKS)
SCALE: N.T.S.

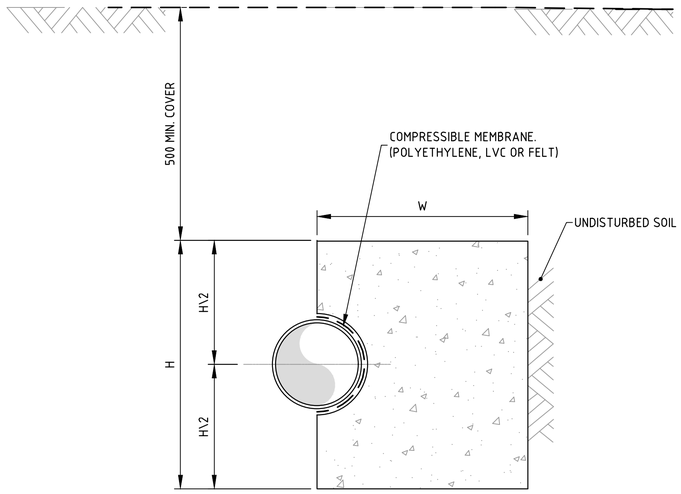

SECTION A
NTS

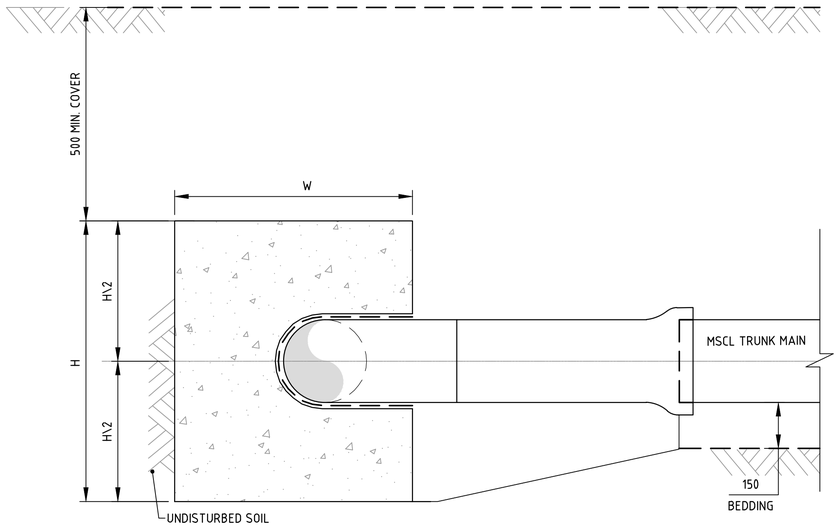

SECTION B
NTS

0 0.1 0.2 0.4 0.6
1:10 (A1); 1:20 (A3)

NOT FOR CONSTRUCTION

REVISION PANEL				
REV	DATE	DRN	DETAILS	APR'D
0.1D	13.10.23	CSS	60% DESIGN	SW
0.1C	08.09.23	JW	60% DRAFT DESIGN FOR REVIEW	SW
0.1B	14.07.23	CSS	30% CONCEPT DESIGN	SW
0.1A	07.06.23	CSS	30% CONCEPT DESIGN - DRAFT FOR REVIEW	SW

CURRENT REV CONTRACTOR: TONKIN / WSP CURRENT REV PROJECT: 220258

CURRENT REV 13.10.23
AUTHORISED J.TYLER
SIGNATURE

DESIGN PANEL
DESIGNED 13.10.23 P.SWINCER/L.HAYSMAN
DRAWN 13.10.23 C.SUTCLIFFE
REVIEWED 13.10.23 S.WHICHELO
AUTHORISED 13.10.23 J.TYLER
SIGNATURE
CONTRACTOR: TONKIN & WSP

Government of South Australia
SA Water

This drawing is the property of the SOUTH AUSTRALIAN WATER CORPORATION and shall not be copied or modified in part or in whole without authorization.

EYRE PENINSULA DESALINATION PLANT

TREATED WATER TRANSFER PIPELINE
NETWORK & RETICULATION
THRUST BLOCK DETAILS

A1 SHT SIZE
TOTAL SHEETS:
PROJECT No: A0012-0025
0.1D REVISION
MAXIMO ID: P041992
SUPERSEDES:
DRAWING NUMBER
P041992-05-00003_02

PIPE OD (mm)	DESIGN PRESSURE (m HEAD)	ASSUMED DESIGN AHBP (kPa)	DIMENSIONS (m)			TRENCH WIDTH W1 (m)	REINFORCEMENT (BF)		ASSUMED SOIL TYPE
			W2	H	D		HORIZONTAL	VERTICAL	
648	250	50	3.6	2.3	1.0	1.25	N24@200	N20@200	REFER NOTE GC2
		75	2.7	2.0	1.0	1.25	N24@200	N20@200	REFER NOTE GC2
		100	2.1	2.0	1.0	1.25	N24@200	N20@200	REFER NOTE GC2

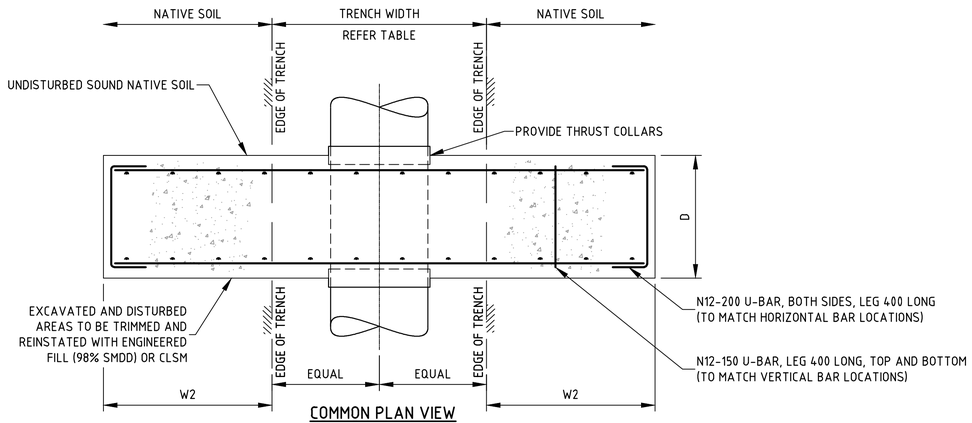

COMMON PLAN VIEW
N.T.S.

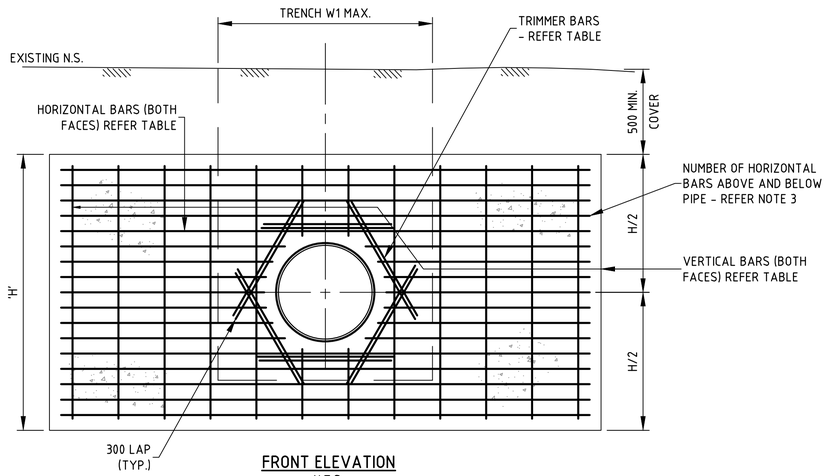

FRONT ELEVATION
N.T.S.
(PERIMETER BARS NOT SHOWN FOR CLARITY)

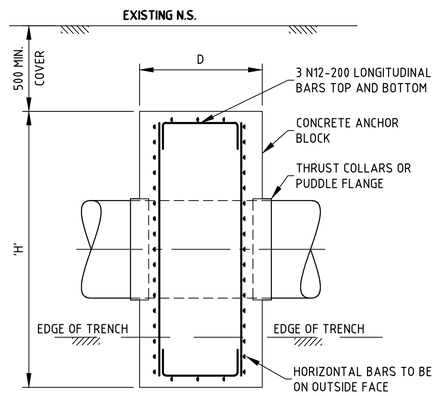

COMMON SIDE ELEVATION
N.T.S.
(PERIMETER BARS NOT SHOWN FOR CLARITY)

ANCHOR BLOCK NOTES:

GENERAL

1. ANCHOR BLOCK NOT TO INTERFERE WITH EXISTING SERVICES. ANCHOR BLOCK BEARING SURFACE SHALL BE A MINIMUM 4.0m CLEARANCE FROM EXISTING SERVICES AND POWER POLES.

GEOTECHNICAL CONDITIONS

1. AHBP - ALLOWABLE HORIZONTAL BEARING PRESSURE OF INSITU SOIL.
2. REFER TO SEPARATE GEOTECHNICAL REPORT A0012-0025-GEO-REP-10001.
3. DESIGN OF ANCHOR BLOCK MAY NEED TO BE ALTERED FOLLOWING DETAILED GEOTECHNICAL TESTING /ASSESSMENT ASSESSMENT OF SITE AND THE PROGRESSION OF DETAILED DESIGN.
4. COVER TO ANCHOR BLOCKS VARY, TO BE CONFIRMED IN FUTURE DETAILED DESIGN.

CONCRETE AND REINFORCEMENT

1. CONCRETE GRADE TO BE MINIMUM S40 IN ACCORDANCE WITH TS0710 AND AS1379.
2. REINFORCEMENT NOT TO BE LESS THAN THE MINIMUM SPECIFIED IN AS 3600.
3. HORIZONTAL REINFORCEMENT SHALL HAVE AT LEAST 5 COMPLETE BARS TO BOTH FACE, TOP AND BOTTOM OF PIPE.
4. REINFORCING BARS NEAREST TO THE PIPE SHALL BE LOCATED 75 mm FROM THE PIPE.
5. GENERAL COVER TO REINFORCEMENT TO BE 75mm.
6. CONSTRUCTION JOINT PERMITTED WHERE REQUIRED. MINIMUM REINFORCEMENT LAP MUST BE ACHIEVED. IF CONSTRUCTION INVOLVES MULTIPLE POURS, FINISH OF PREVIOUS POUR TO BE HEAVILY SCABBLED PRIOR TO INITIAL SET TO ENSURE ADEQUATE BIND TO SUBSEQUENT POUR.

0 0.1 0.2 0.4 0.6
1:10 (A1); 1:20 (A3)

NOT FOR CONSTRUCTION

REVISION PANEL

REV	DATE	DRN	DETAILS	APR'D
0.1D	13.10.23	CSS	60% DESIGN	SW
0.1C	08.09.23	JW	60% DRAFT DESIGN FOR REVIEW	SW
0.1B	14.07.23	CSS	30% CONCEPT DESIGN	SW
0.1A	07.06.23	CSS	30% CONCEPT DESIGN - DRAFT FOR REVIEW	SW

CURRENT REV CONTRACTOR: TONKIN / WSP CURRENT REV PROJECT: 220258

CURRENT REV AUTHORISED 13.10.23
J.TYLER
SIGNATURE

DESIGN PANEL

DESIGNED	13.10.23	AUTHORISED	13.10.23
P.SWINCER/L.HAYSMAN		J.TYLER	
DRAWN	13.10.23	SIGNATURE	
C.SUTCLIFFE			
REVIEWED	13.10.23		
S.WHICHELO			

CONTRACTOR: TONKIN & WSP

SA Water

This drawing is the property of the SOUTH AUSTRALIAN WATER CORPORATION and shall not be copied or modified in part or in whole without authorization.

EYRE PENINSULA DESALINATION PLANT

TREATED WATER TRANSFER PIPELINE NETWORK & RETICULATION ANCHOR BLOCK DETAILS

A1 SHT SIZE | TOTAL SHEETS: | PROJECT No: A0012-0025 | 0.1D REVISION

MAXIMO ID: P041992

SUPERSEDES:

DRAWING NUMBER
P041992-05-00003_03

NOTES:

1. ALL DI VALVES, PIPES AND FITTINGS FBE COATED TO AS4158.
2. REFER TO WSCM SECTION 4005-30007 FOR DETAILS OF SPINDLE AND CAST IRON CHAMBERS.
3. FOR PIPE BEDDING AND BACKFILL REFER SKETCH P041992-05-00003_01.
4. ALL FLANGED JOINTS COATED AND WRAPPED WITH BITUMEN MASTIC TAPE FOR CORROSION PROTECTION IN ACCORDANCE WITH SA WATER SPECIFICATION TS18.
5. ALL FLANGES PN35 TO AS4087 U.N.O.
6. ALL MILD STEEL PIPE SHALL BE MILD STEEL GRADE 300 MINIMUM (U.N.O).
7. MILD STEEL PIPE EXTERNALLY COATED WITH A FUSION BONDED MEDIUM DENSITY POLYETHYLENE COATING IN ACCORDANCE WITH AS4321.
8. MILD STEEL PIPE INTERNALLY LINED WITH CEMENT MORTAR IN ACCORDANCE WITH MANUFACTURER SPECIFICATION AND AS1581.
9. WELDING OF MS PIPEWORK IN ACCORDANCE WITH SA WATER TECHNICAL STANDARD TS0420.
10. REFER STANDARD DATA SHEETS FOR GATE VALVE SPECIFICATIONS.
11. SINTALOCK JOINT TYPE TO BE CONFIRMED DURING DETAILED DESIGN PHASE.
12. MINIMUM COVER AT VALVE LOCATION TO BE CONFIRMED BASED ON PREFERRED SUPPLIER VALVE DIMENSIONS DURING FUTURE DESIGN STAGE.
13. REFER DATASHEET A00012-0025-PKGC-DAT-001 FOR GATE VALVE SPECIFICATION.
14. FOR TRENCH REINSTATEMENT AROUND VALVE, REFER TYPE 5 DETAIL ON SHEET A0012-0025-PKGC-DET-SKH-002.
15. REFER DRGS P041992-05-00002_01 TO _27 FOR VALVE AND BYPASS LOCATIONS AND PIPELINE ALIGNMENT AND PIPE DATASHEET FOR PIPELINE DETAILS.

TRUNK MAIN ISOLATION - FITTING SCHEDULE

ITEM No.	DESCRIPTION	QTY	MATERIAL	STANDARD
1	DN600 METAL SEATED GATE VALVE FL-FL.	1	REFER NOTE 10	AS2638.1
2	OD648 X 6WT PIPE FL-PE. REFER NOTE 15	1	MSCL	AS1579
3	OD168 WELDED BYPASS OFFTAKE BRANCH. REFER DRG. P041992-02-00003_08	2	MSCL	AS1579
4	WELDED CLOSING COLLAR. REFER DRG. P041992-02-00003_11	4	MS	AS1579
5	OD648 X 8WT PIPE FL-SO. SOCKET END TO SUIT RRJ	1	MSCL	AS1579
6	DN150 METAL SEATED GATE VALVE (FL-FL)	2	DIFBE	AS2638.1
7	DN150 90° BEND, FL-PE	2	316L SS SCH40S	AS5200
8	DN150 PIPE SPOOL (PE-PE)	2	316L SS SCH40S	AS5200
9	DN80 HYDRANT (FIREPLUG)	2	DIFBE	TS0503
10	OD114 X 4.8WT OFFTAKE BRANCH. REFER DRG. P041992-02-00003_08	2	MSCL	AS1579
11	DN100 EXTENSION PIPE (FL-FL, LENGTH TO SUIT)	2	DICL	AS2280
12	DN100-DN80 REDUCER (FL-FL)	2	DIFBE	AS2280

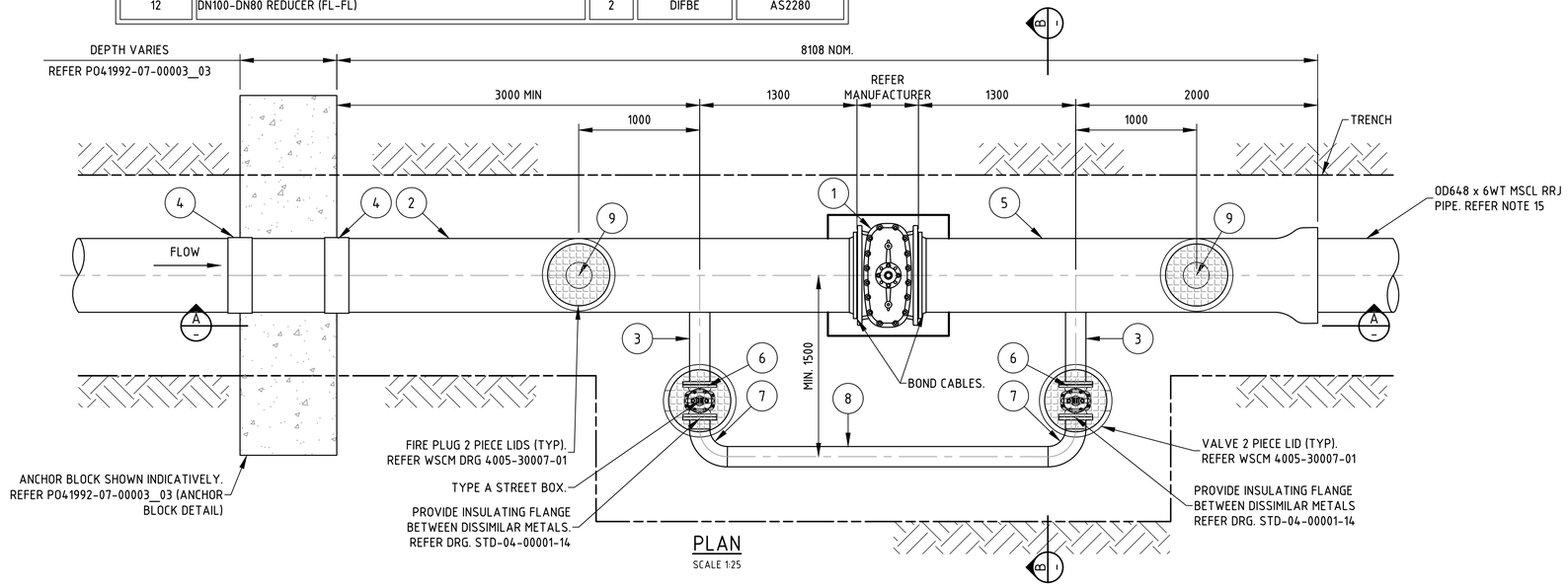

PLAN
SCALE 1:25

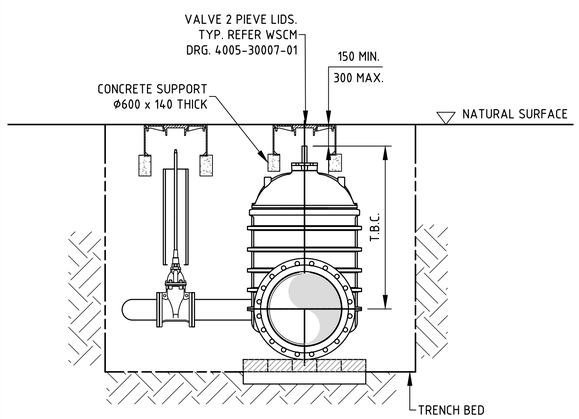

SECTION B
SCALE 1:25

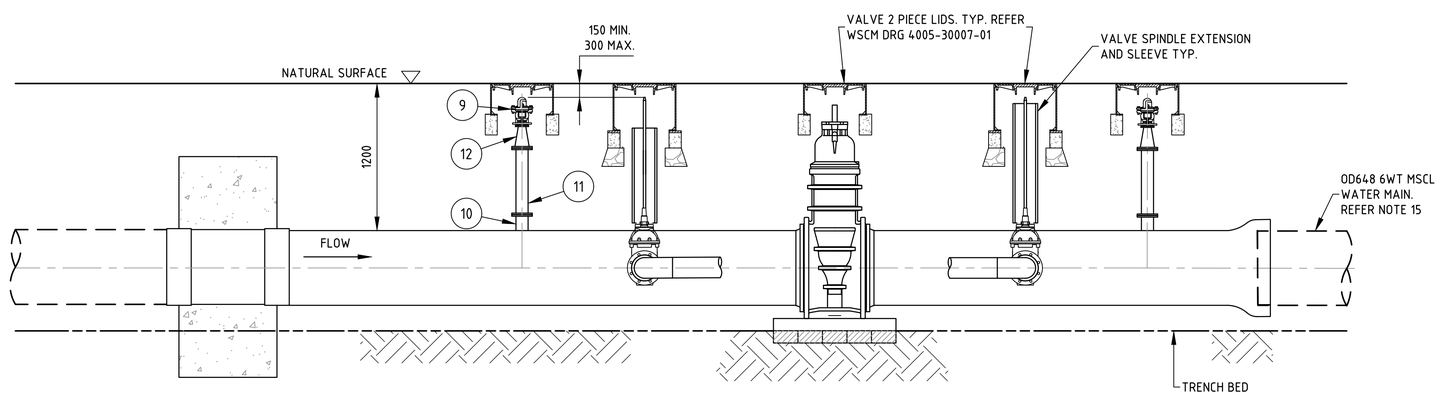

SECTION A
SCALE 1:25

NOT FOR CONSTRUCTION

0 0.25 0.5 1.0 1.5
1:25 (A1); 1:50 (A3)

REVISION PANEL				
REV	DATE	DRN	DETAILS	APR'D
0.1D	13.10.23	CSS	60% DESIGN	SW
0.1C	08.09.23	JW	60% DRAFT DESIGN FOR REVIEW	SW
0.1B	14.07.23	CSS	30% CONCEPT DESIGN	SW
0.1A	07.06.23	CSS	30% CONCEPT DESIGN - DRAFT FOR REVIEW	SW

CURRENT REV CONTRACTOR: TONKIN / WSP CURRENT REV PROJECT: 220258

CURRENT REV 13.10.23
AUTHORISED J.TYLER
SIGNATURE

DESIGN PANEL			
DESIGNED	13.10.23	AUTHORISED	13.10.23
P.SWINCER/L.HAYSMAN		J.TYLER	
DRAWN	13.10.23	SIGNATURE	
C.SUTCLIFFE			
REVIEWED	13.10.23		
S.WHICHELO			

CONTRACTOR: TONKIN & WSP

Government of South Australia
SA Water

This drawing is the property of the SOUTH AUSTRALIAN WATER CORPORATION and shall not be copied or modified in part or in whole without authorization.

EYRE PENINSULA DESALINATION PLANT

TREATED WATER TRANSFER PIPELINE NETWORK & RETICULATION ISOLATION VALVE DETAILS

A1 SHT SIZE | TOTAL SHEETS: | PROJECT No: A0012-0025 | 0.1D REVISION

MAXIMO ID: P041992

SUPERSEDES:

DRAWING NUMBER
P041992-05-00003_04

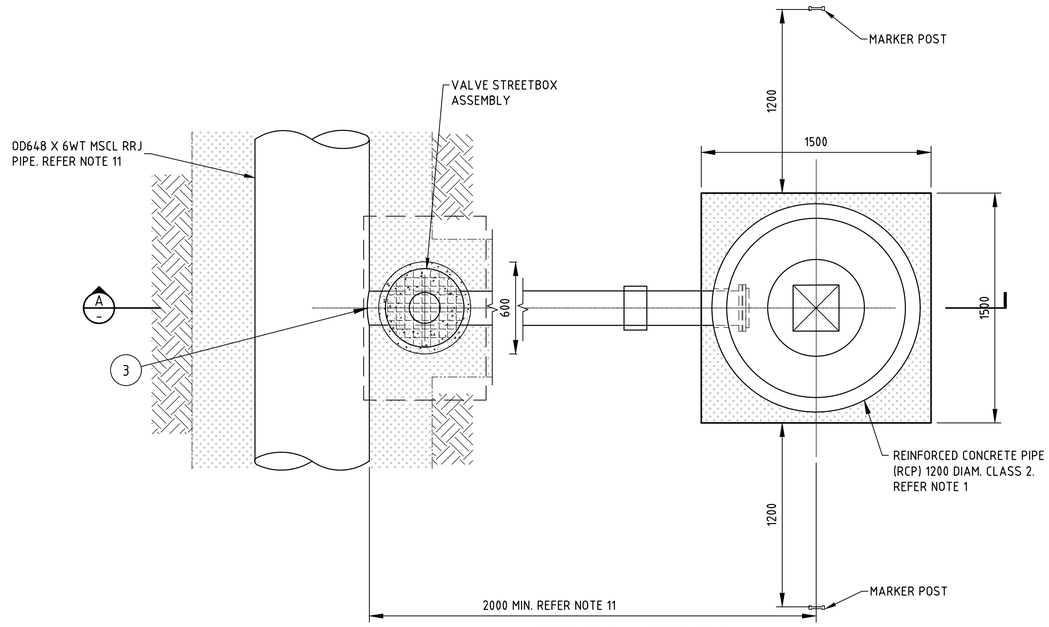

SCOUR CHAMBER PLAN

SCALE 1:20

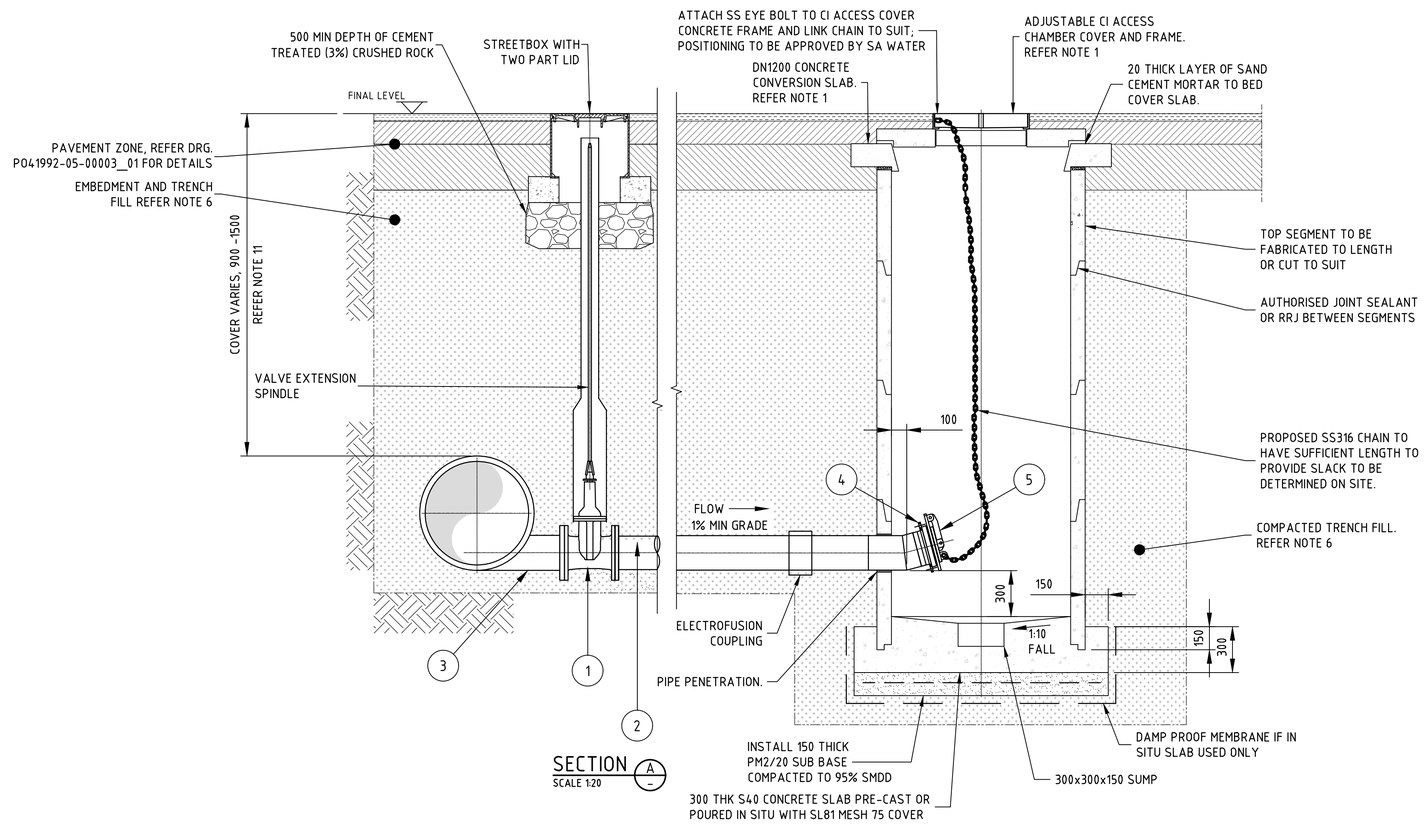

SECTION A

SCALE 1:20

SCOUR PIT SIZE SCHEDULE			
TRUNK MAIN SIZE	SCOUR VALVES & FITTINGS NOMINAL SIZE	SCOUR OFF-TAKE BRANCH SIZE	SCOUR VALVE PN RATING
OD648 x 6WT	DN150	DN150	25

SCOUR VALVE AND VALVE CHAMBER - MATERIALS SCHEDULE				
ITEM No.	DESCRIPTION	MATERIAL	PN	STANDARD
1	DN150 GATE VALVE, METAL SEATED, FL-FL	DIFBE	25	AS4087, AS2638.2
2	180 PE PIPE, LENGTH TO SUIT. PROVIDE HDG BACKING RINGS WITH DENSO WRAPPING AT FLANGE CONNECTIONS	PE100	25	AS4087, AS4130
3	OD168x5WT WELDED SCOUR TEE. REFER DRG. P041992-02-00003_10	MSCL	-	AS4087, AS1579, AS1281
4	DN150 STUB FLANGE WITH GALV BACKING RING	PE100	25	AS4130
5	DN150 FLAP TYPE VALVE - FERNCO FV200 FLANGE MOUNT (OR APPROVED EQUIVALENT)	HDPE/SS	-	-

NOTES:

1. REFER SCM SECTION 5 FOR DETAILS OF DECHLORINATION CHAMBER.
2. ALL FLANGES SHALL BE PN35 U.N.O. TO AS4087.
3. ALL FLANGED JOINTS SHALL BE WRAPPED WITH BITUMEN MASTIC TAPE FOR CORROSION PROTECTION IN ACCORDANCE WITH SA WATER TECHNICAL STANDARD TS18.
4. ALL DI VALVES TO BE FBE COATED INSIDE AND OUT TO AS4158.
5. REFER TO WSCM 4005-30007-01 & 02 AND SA WATER AUTHORISED PRODUCTS FOR DETAILS OF SPINDLE AND ACCESS CHAMBERS.
6. FOR PIPE AND CHAMBER BACKFILL AND REINSTATEMENT DETAILS REFER TO TYPICAL TRENCH DETAILS SHEET P041992-05-00003_01.
7. FOR OFFTAKE PIPE EMBEDMENT INSTALLATION, REFER TO SA WATER WSCM SECTION 3.
8. ALL PIPE, FITTINGS, FLANGES AND FASTENERS SHALL BE IN ACCORDANCE WITH TS0503
9. INSTALL SCOUR VALVE INDICATOR SIGNS AND POSTS FOR SCOUR, FOR EACH LOCATION AS PER SA WATER WSCM 4005-30007-01.
10. STREET BOX COVERS SHALL BE MARKED 'WATER'. REFER TO WSCM SECTION 4005-30007 FOR DETAILS OF SPINDLE AND CAST IRON CHAMBERS.
11. REFER DRGS P041992-05-00002_01 TO _27 FOR SCOUR AND CHAMBER LOCATIONS, DEPTH AND PIPELINE ALIGNMENT.
12. INCLUDE SAFE BATTERS IN THE DESIGN OF THE CHAMBER. CHAMBER LIDS TO REMAIN TRAFFICABLE.

0 0.1 0.2 0.4 0.6
1:10 (A1); 1:20 (A3)

NOT FOR CONSTRUCTION

REVISION PANEL

REV	DATE	DRN	DETAILS	APR'D
0.1D	13.10.23	CSS	60% DESIGN	SW
0.1C	08.09.23	JW	60% DRAFT DESIGN FOR REVIEW	SW
0.1B	14.07.23	CSS	30% CONCEPT DESIGN	SW
0.1A	07.06.23	CSS	30% CONCEPT DESIGN - DRAFT FOR REVIEW	SW

CURRENT REV CONTRACTOR: TONKIN / WSP CURRENT REV PROJECT: 220258

CURRENT REV AUTHORISED 13.10.23 J.TYLER SIGNATURE

DESIGN PANEL

DESIGNED 13.10.23 P.SWINCER/L.HAYSMAN
DRAWN 13.10.23 C.SUTCLIFFE
REVIEWED 13.10.23 S.WHICHELO
AUTHORISED 13.10.23 J.TYLER SIGNATURE
CONTRACTOR: TONKIN & WSP

Government of South Australia
SA Water

This drawing is the property of the SOUTH AUSTRALIAN WATER CORPORATION and shall not be copied or modified in part or in whole without authorization.

EYRE PENINSULA DESALINATION PLANT

TREATED WATER TRANSFER PIPELINE NETWORK & RETICULATION

SCOUR PIT DETAILS

A1 SHT SIZE | TOTAL SHEETS: | PROJECT No: A0012-0025 | 0.1D REVISION

MAXIMO ID: P041992

SUPERSEDES:

DRAWING NUMBER P041992-05-00003_05

BEND DIMENSIONS							
DN	OUTSIDE DIAMETER D (mm)	BEND WALL THICKNESS (mm)	RADIUS R	BEND OVERALL DIMENSION FOR DIFFERENT BEND ANGLES			
				0<A≤22.5° M	22.5<A≤45° N	45<A≤67.5° P	67.5<A≤90° Q
600	648	6	1620 (2.5D)	600	1000	1500	2450

NOTES:

1. PIPE SHALL BE EXTERNALLY COATED WITH A FUSION BONDED MEDIUM DENSITY POLYETHYLENE (FBMDP) COATING IN ACCORDANCE WITH AS4321 OR SIMILAR APPROVED. DENSO WRAP NOT PERMITTED ON THESE MITRED BEND FITTINGS.
2. WITHIN MSCL PIPE SECTIONS PIPE SHALL BE INTERNALLY LINED WITH CEMENT MORTAR IN ACCORDANCE WITH THE PIPE MANUFACTURERS SPECIFICATION AND AS1581.
3. ALL MATERIALS SHALL BE MILD STEEL GRADE 300 MINIMUM (UNO).
4. EDGE PREPARATION AND WELDING IN ACCORDANCE WITH AS4041 CLASS 2P.
5. BENDS SHALL BE PROVIDED WITH ONE SPIGOT END AND ONE SOCKET END TO FACILITATE CONNECTION TO RUBBER RING JOINTS AS REQUIRED, SOME BENDS MAY HAVE PLAIN ENDS AS PART OF A SHOP FABRICATED ASSEMBLY, CONTRACTOR TO CONFIRM.
6. WELDING AND TESTING SHALL BE IN ACCORDANCE WITH SA WATER TS 0420 AND THE TECHNICAL SPECIFICATION.
7. THE USE OF CLOSING COLLARS SHALL BE MINIMISED. ALL CLOSING COLLAR LOCATIONS SHALL BE IDENTIFIED BY CONTRACTOR AND APPROVED BY THE SUPERINTENDENT.

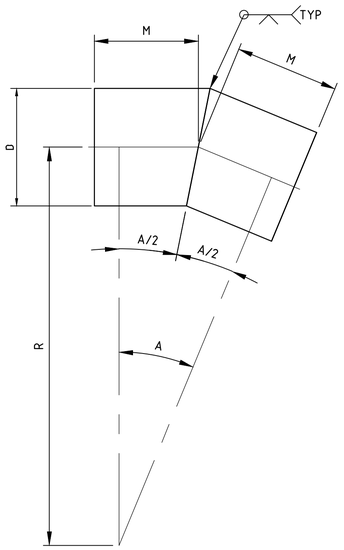

BEND (0°<A ≤22.5°)
REFER TABLE THIS SHEET
N.T.S.

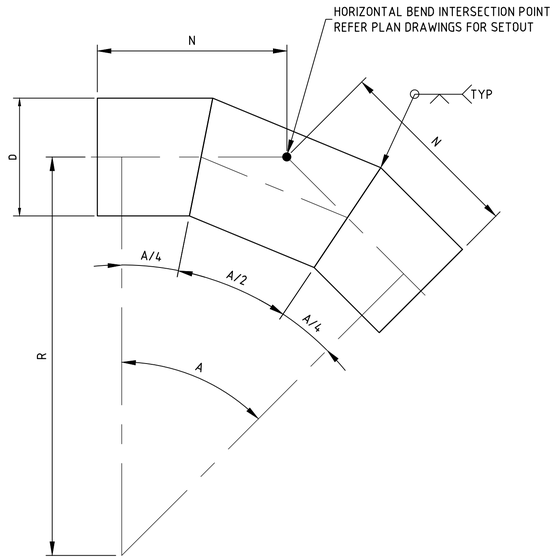

BEND (22.5°<A ≤45°)
REFER TABLE THIS SHEET
N.T.S.

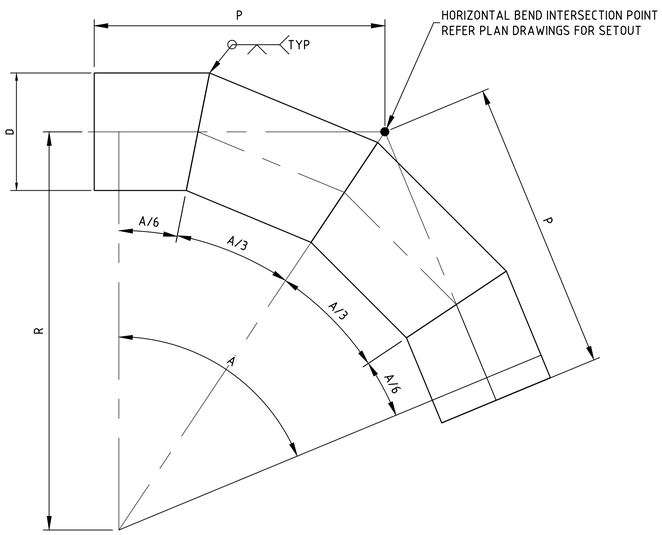

BEND (45°<A ≤67.5°)
REFER TABLE THIS SHEET
N.T.S.

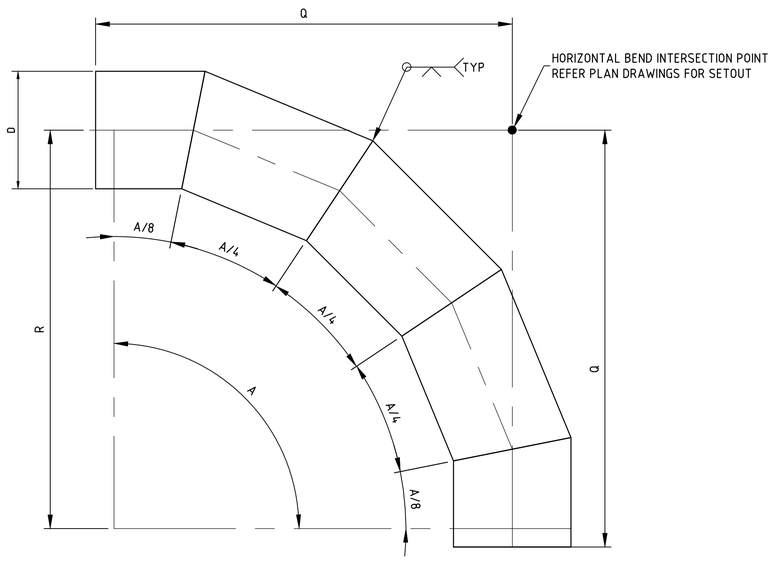

BEND (67.5°<A ≤90°)
REFER TABLE THIS SHEET
N.T.S.

NOT FOR CONSTRUCTION

0 0.25 0.5 1 1.5
1 : 25m (A1) - 1 : 50m (A3)

REVISION PANEL

REV	DATE	DRN	DETAILS	APR'D
0.1D	13.10.23	CSS	60% DESIGN	SW
0.1C	08.09.23	JW	60% DRAFT DESIGN FOR REVIEW	SW
0.1B	14.07.23	CSS	30% CONCEPT DESIGN	SW
0.1A	07.06.23	CSS	30% CONCEPT DESIGN - DRAFT FOR REVIEW	SW

CURRENT REV CONTRACTOR: TONKIN / WSP CURRENT REV PROJECT: 220258

CURRENT REV AUTHORISED 13.10.23
J.TYLER
SIGNATURE

DESIGN PANEL

DESIGNED	13.10.23	AUTHORISED	13.10.23
P.SWINCER/L.HAYSMAN		J.TYLER	
DRAWN	13.10.23	SIGNATURE	
C.SUTCLIFFE			
REVIEWED	13.10.23		
S.WHICHELO			

CONTRACTOR: TONKIN / WSP

Government of South Australia
SA Water

This drawing is the property of the SOUTH AUSTRALIAN WATER CORPORATION and shall not be copied or modified in part or in whole without authorization.

EYRE PENINSULA DESALINATION PLANT

TREATED WATER TRANSFER PIPELINE
NETWORK & RETICULATION
MSCL PIPE BEND DETAILS

A1 SHT SIZE
TOTAL SHEETS:
PROJECT No: A0012-0025
0.1D REVISION
MAXIMO ID: P041992
SUPERSEDES:
DRAWING NUMBER
P041992-05-00003__06

NOTES:

1. REFER TO WSCM 4005-30005-16 AND 17 FOR FURTHER DETAILS.
2. RAIL CROSSING DESIGN AND INSTALLATION SHALL BE IN ACCORDANCE WITH AS 4799.
3. REFER DRGS P041992-05-00002_01 TO _27 FOR CROSSING LOCATIONS AND PIPELINE ALIGNMENT

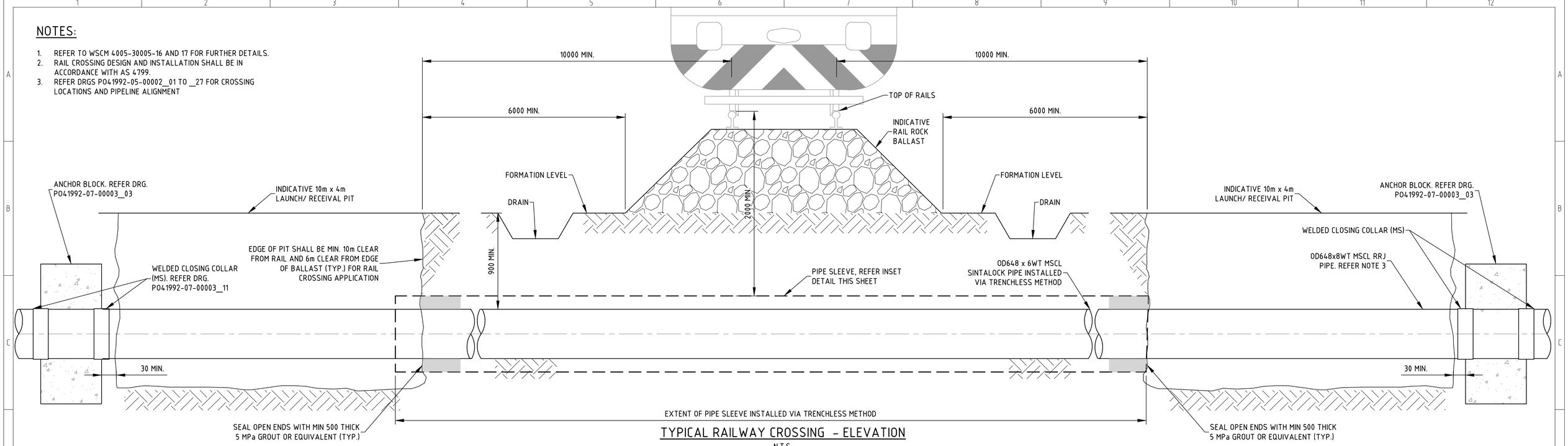

TYPICAL RAILWAY CROSSING - ELEVATION

N.T.S.

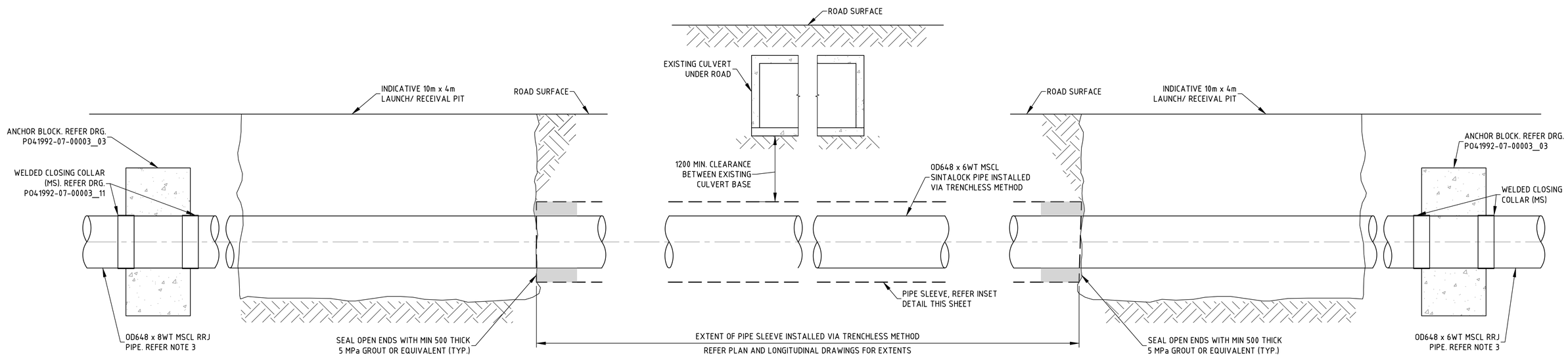

TYPICAL TRENCHLESS CULVERT CROSSING - ELEVATION

N.T.S.

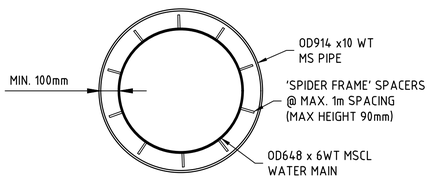

CARRIER PIPE SLEEVE DETAIL

N.T.S.

NOT FOR CONSTRUCTION

0 0.25 0.5 1.0 1.5
1:25 (A1); 1:50 (A3)

REVISION PANEL

REV	DATE	DRN	DETAILS	APR'D
0.1D	13.10.23	CSS	60% DESIGN	SW
0.1C	08.09.23	JW	60% DRAFT DESIGN FOR REVIEW	SW
0.1B	14.07.23	CSS	30% CONCEPT DESIGN	SW
0.1A	07.06.23	CSS	30% CONCEPT DESIGN - DRAFT FOR REVIEW	SW

CURRENT REV CONTRACTOR: TONKIN / WSP CURRENT REV PROJECT: 220258

CURRENT REV 13.10.23
AUTHORISED J.TYLER
SIGNATURE

DESIGN PANEL

DESIGNED 13.10.23 P.SWINCER/L.HAYSMAN
DRAWN 13.10.23 C.SUTCLIFFE
REVIEWED 13.10.23 S.WHICHELO
AUTHORISED 13.10.23 J.TYLER
SIGNATURE
CONTRACTOR: TONKIN & WSP

SA Water
Government of South Australia

This drawing is the property of the SOUTH AUSTRALIAN WATER CORPORATION and shall not be copied or modified in part or in whole without authorization.

EYRE PENINSULA DESALINATION PLANT

TREATED WATER TRANSFER PIPELINE NETWORK & RETICULATION TRENCHLESS CROSSING DETAIL

A1 SHT SIZE
TOTAL SHEETS:
PROJECT No: A0012-0025
0.1D REVISION
MAXIMO ID: P041992
SUPERSEDES:
DRAWING NUMBER
P041992-05-00003_07

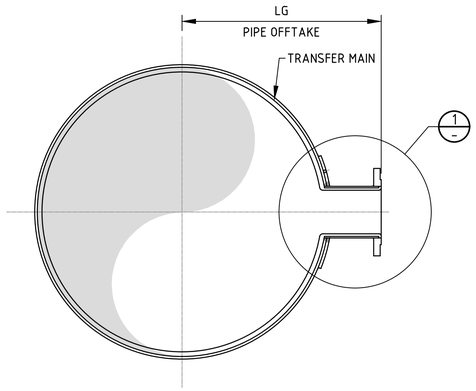

SECTION A
SCALE 1:10

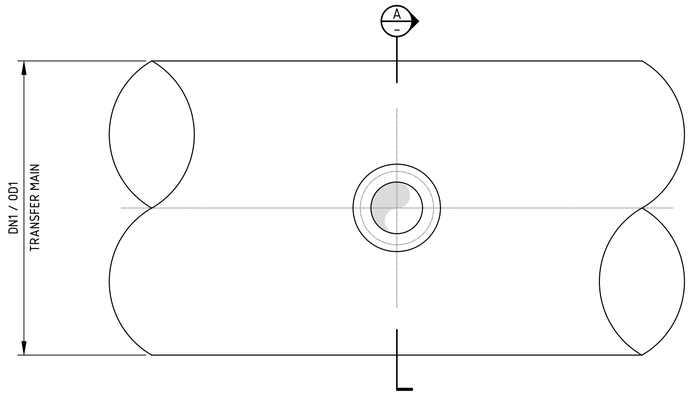

ELEVATION
SCALE 1:10

BRANCH OFFTAKE - DIMENSIONS										
MWPL 1 TRANSFER MAIN			PIPE OFFTAKE				FLANGE	COMPENSATION PLATE		
DN1	OD1	WALL THICKNESS (WT)	DN2	OD2	WALL THICKNESS (PT)	MIN LENGTH (LG)	PRESSURE CLASS	WIDTH (RL)	THICKNESS (RT)	WELD SIZE (T1)
600	648	6	100	114	4.8	600	PN35	50	5	5
600	648	6	150	168	5	600	PN35	80	5	5

NOTES:

1. FOR GENERAL PIPE NOTES REFER TO DRG P041992-05-00001_02
2. ALL DIMENSIONS ARE IN MILLIMETRES (UNO).
3. ALL MATERIAL SHALL BE MILD STEEL GRADE 300 MINIMUM (UNO).
4. DRILL AND TAP Ø8 BSP TEST HOLE. APPLY AIR PRESSURE AT 100kPa HELD FOR 15 SECONDS. ON COMPLETION FILL TEST VENTS WITH WELD AND GROUND FLUSH.
5. WELDING AND TESTING SHALL BE IN ACCORDANCE WITH SA WATER STANDARD TS 0420.
6. PIPE SHALL BE EXTERNALLY COATED WITH A FUSION BONDED MEDIUM DENSITY POLYETHYLENE (FBMDP) COATING IN ACCORDANCE WITH AS4321 OR SIMILAR APPROVED. COATING IN THE FLAT AREA AROUND FLANGE BOLT HOLES SHOULD BE REMOVED.
7. REINSTATE REMOVED OR DAMAGED EXTERNAL COATING IN ACCORDANCE WITH PIPE MANUFACTURER'S SPECIFICATIONS.
8. PIPE SHALL BE INTERNALLY LINED WITH CEMENT MORTAR IN ACCORDANCE WITH THE MANUFACTURER'S SPECIFICATION & AS1281. REPAIR DAMAGED LINER IN ACCORDANCE WITH THE MANUFACTURER'S SPECIFICATION & SA WATER TS0465.
9. WELD SIZE EQUAL TO COMBINED PIPE AND MAIN REINFORCEMENT THICKNESS

WELDING LEGEND:

CJP COMPLETE JOINT PENETRATION

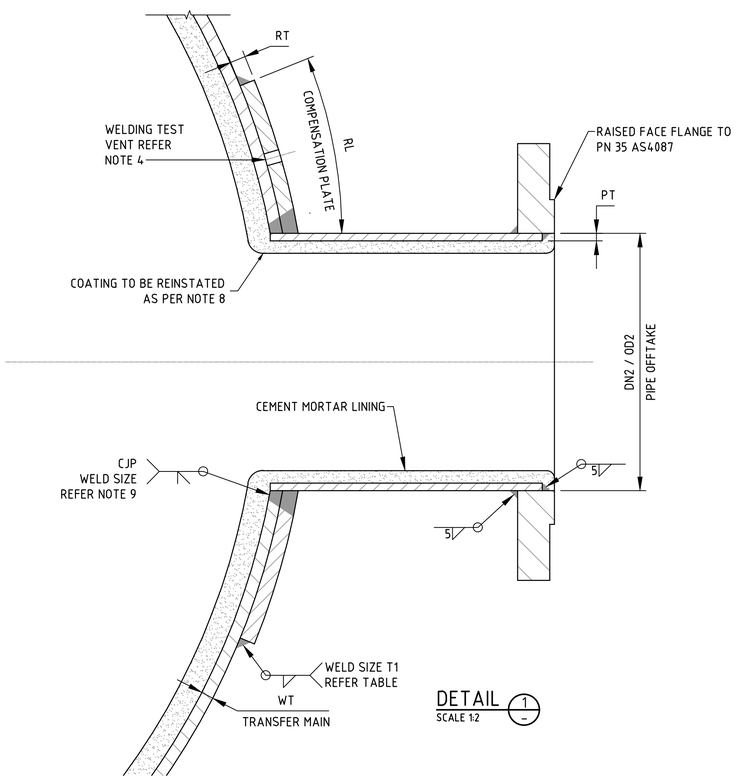

DETAIL 1
SCALE 1:2

NOT FOR CONSTRUCTION

0 0.02 0.04 0.08 0.12
1:2 (A1); 1:4 (A3)

0 0.1 0.2 0.4 0.6
1:10 (A1); 1:20 (A3)

REVISION PANEL

REV	DATE	DRN	DETAILS	APR'D
0.1B	13.10.23	CSS	60% DESIGN	SW
0.1A	08.09.23	BN	60% CONCEPT DESIGN - DRAFT FOR REVIEW	

CURRENT REV CONTRACTOR: TONKIN / WSP
CURRENT REV PROJECT: 220258

CURRENT REV 13.10.23
AUTHORISED J.TYLER
SIGNATURE

DESIGN PANEL

DESIGNED	13.10.23	AUTHORISED	13.10.23
P.SWINCER/L.HAYSMAN		J.TYLER	
DRAWN	13.10.23	SIGNATURE	
B.NEWTON			
REVIEWED	13.10.23		
S.WHICHELO			

CONTRACTOR: TONKIN / WSP

Government of South Australia
SA Water

This drawing is the property of the SOUTH AUSTRALIAN WATER CORPORATION and shall not be copied or modified in part or in whole without authorization.

EYRE PENINSULA DESALINATION PLANT

TREATED WATER TRANSFER PIPELINE
NETWORK & RETICULATION
BRANCH TEE DETAIL

A1 SHT SIZE
TOTAL SHEETS:
PROJECT No: A0012-0025
0.1B REVISION
MAXIMO ID: P041992
SUPERSEDES:
DRAWING NUMBER
P041992-05-00003_08

SCOUR BRANCH - DIMENSIONS									
MWPL 1 TRANSFER MAIN			PIPE OFFTAKE				FLANGE	COMPENSATION PLATE	
DN1	OD1	WALL THICKNESS (WT)	DN2	OD2	WALL THICKNESS (PT)	MIN. LENGTH (LG)	PRESSURE CLASS	WIDTH (RL)	THICKNESS (RT)
600	648	6	150	168	5	500	PN35	80	5

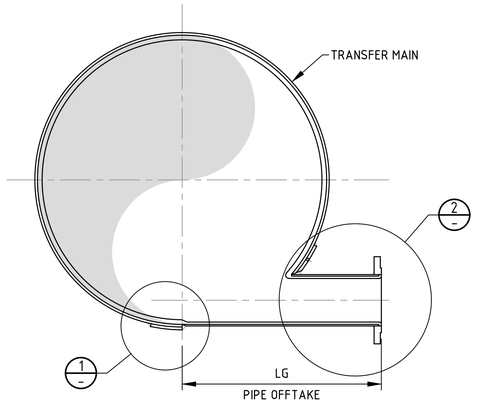

SECTION A
NTS

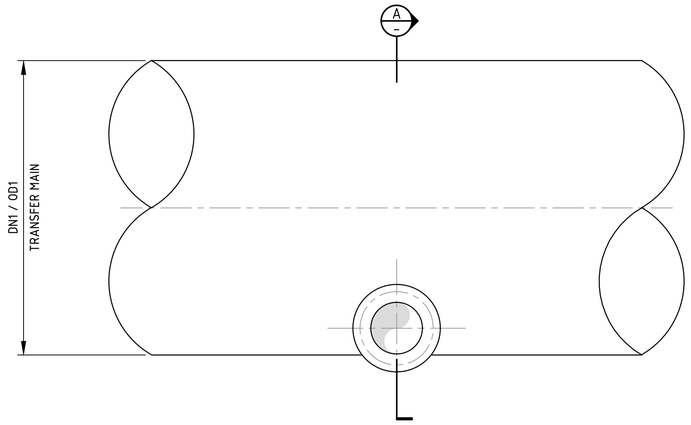

ELEVATION
NTS

NOTES:

1. FOR GENERAL PIPE NOTES REFER TO DRG P041992-05-00001_02
2. ALL DIMENSIONS ARE IN MILLIMETRES (UNO).
3. ALL MATERIAL SHALL BE MILD STEEL GRADE 300 MINIMUM (UNO).
4. DRILL AND TAP Ø8 BSP TEST HOLE. APPLY AIR PRESSURE AT 100kPa HELD FOR 15 SECONDS. ON COMPLETION FILL TEST VENTS WITH WELD AND GROUND FLUSH.
5. WELDING AND TESTING SHALL BE IN ACCORDANCE WITH SA WATER STANDARD TS 0420.
6. PIPE SHALL BE EXTERNALLY COATED WITH A FUSION BONDED MEDIUM DENSITY POLYETHYLENE (FBMDP) COATING IN ACCORDANCE WITH AS4321 OR SIMILAR APPROVED . COATING IN THE FLAT AREA AROUND FLANGE BOLT HOLES SHOULD BE REMOVED.
7. REINSTATE REMOVED OR DAMAGED EXTERNAL COATING IN ACCORDANCE WITH PIPE MANUFACTURER'S SPECIFICATIONS.
8. PIPE SHALL BE INTERNALLY LINED WITH CEMENT MORTAR IN ACCORDANCE WITH THE MANUFACTURER'S SPECIFICATION & AS1281. REPAIR DAMAGED LINER IN ACCORDANCE WITH THE MANUFACTURER'S SPECIFICATION & SA WATER TS0465.
9. WELD SIZE EQUAL TO REINFORCEMENT PLATE.
10. WELD SIZE EQUAL TO COMBINED PIPE MAIN AND REINFORCEMENT THICKNESS.

WELDING LEGEND:

CJP COMPLETE JOINT PENETRATION

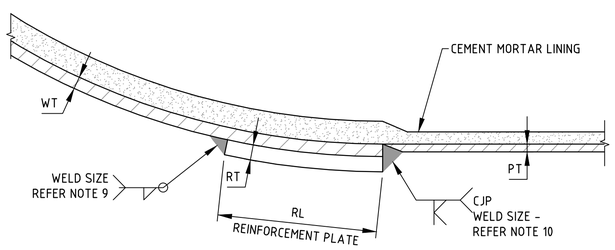

DETAIL 1
NTS

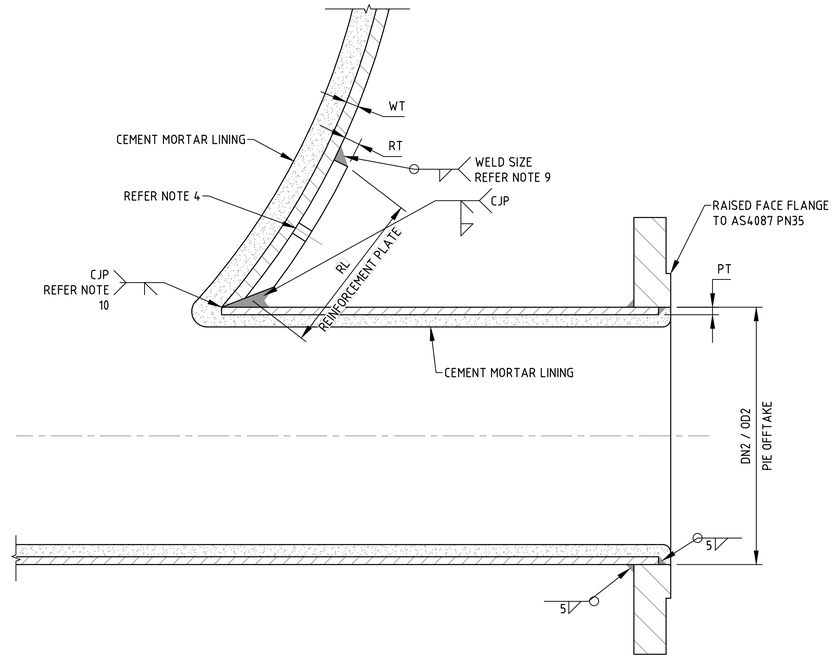

DETAIL 2
NTS

NOT FOR CONSTRUCTION

REVISION PANEL				
REV	DATE	DRN	DETAILS	APR'D
0.1B	13.10.23	CSS	60% DESIGN	SW
0.1A	08.09.23	BN	60% CONCEPT DESIGN - DRAFT FOR REVIEW	

CURRENT REV CONTRACTOR: TONKIN / WSP CURRENT REV PROJECT: 220258

CURRENT REV AUTHORISED 13.10.23 J.TYLER SIGNATURE

DESIGN PANEL			
DESIGNED	13.10.23	AUTHORISED	13.10.23
P.SWINCER/L.HAYSMAN		J.TYLER	
DRAWN	13.10.23	SIGNATURE	
B.NEWTON			
REVIEWED	13.10.23		
S.WHICHELO			

CONTRACTOR: TONKIN / WSP

Government of South Australia
SA Water

This drawing is the property of the SOUTH AUSTRALIAN WATER CORPORATION and shall not be copied or modified in part or in whole without authorization.

EYRE PENINSULA DESALINATION PLANT

TREATED WATER TRANSFER PIPELINE
NETWORK & RETICULATION
SCOUR OFFTAKE DETAIL

A1 SHT SIZE
TOTAL SHEETS:
PROJECT No: A0012-0025
0.1B REVISION
MAXIMO ID: P041992
SUPERSEDES:
DRAWING NUMBER
P041992-05-00003_09

THRUST COLLAR DIMENSIONS			
PIPE PLATE THICKNESS UP TO AND INCLUDING:	COLLAR WIDTH	COLLAR THICKNESS	WELD SIZE
t (mm)	W (mm)	T (mm)	A (mm)
6	200	16	6

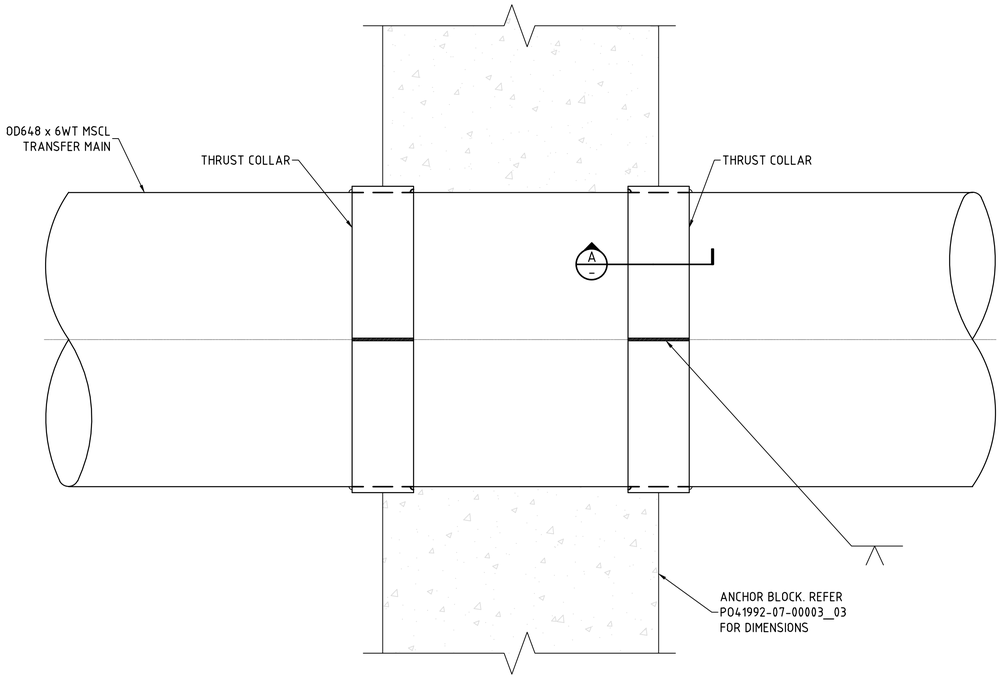

ANCHOR BLOCK THRUST COLLAR - ELEVATION

NOT TO SCALE

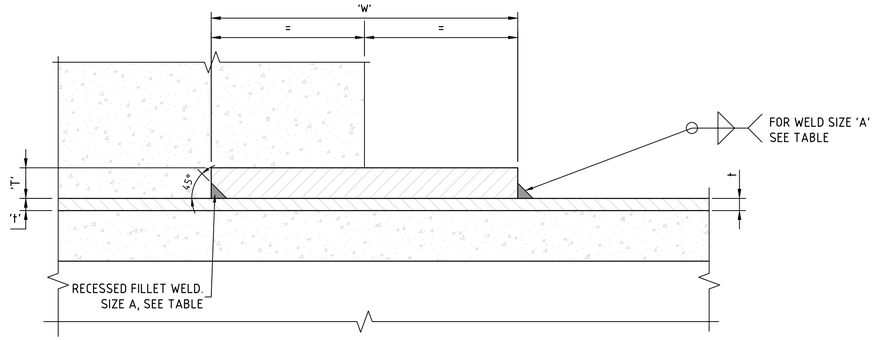

BELOW GROUND INSTALLATION SECTION A

SCALE 1:2

THRUST COLLAR NOTES:

1. FOR GENERAL PIPE NOTES REFER TO DRG P041992-05-00001_02.
2. ALL DIMENSIONS ARE IN MILLIMETRES UNLESS NOTED OTHERWISE.
3. ALL MATERIAL MILD STEEL GRADE 300 MINIMUM (UNO).
4. WELDING AND TESTING N ACCORDANCE WITH SA WATER TS 0420 AND THE TECHNICAL SPECIFICATION.
5. ALL EXPOSED STEEL SURFACES INSIDE PIPE SHALL BE COATED WITH AN APPROVED PROTECTIVE COATING SYSTEM.

NOT FOR CONSTRUCTION

0 20 40 80 120mm

1:2 (A1); 1:4 (A3)

REVISION PANEL

REV	DATE	DRN	DETAILS	APR'D
0.1B	13.10.23	CSS	60% DESIGN	SW
0.1A	08.09.23	BN	60% CONCEPT DESIGN - DRAFT FOR REVIEW	

CURRENT REV CONTRACTOR: TONKIN / WSP CURRENT REV PROJECT: 220258

CURRENT REV AUTHORISED 13.10.23
J.TYLER
SIGNATURE

DESIGN PANEL

DESIGNED	13.10.23	AUTHORISED	13.10.23
P.SWINCER/L.HAYSMAN		J.TYLER	
DRAWN	13.10.23	SIGNATURE	
B.NEWTON			
REVIEWED	13.10.23		
S.WHICHELO			

CONTRACTOR: TONKIN / WSP

Government of South Australia

SA Water

This drawing is the property of the SOUTH AUSTRALIAN WATER CORPORATION and shall not be copied or modified in part or in whole without authorization.

EYRE PENINSULA DESALINATION PLANT

TREATED WATER TRANSFER PIPELINE
NETWORK & RETICULATION
THRUST COLLAR DETAILS

A1 SHT SIZE

TOTAL SHEETS:

PROJECT No: A0012-0025

0.1B REVISION

MAXIMO ID: P041992

SUPERSEDES:

DRAWING NUMBER
P041992-05-00003_10

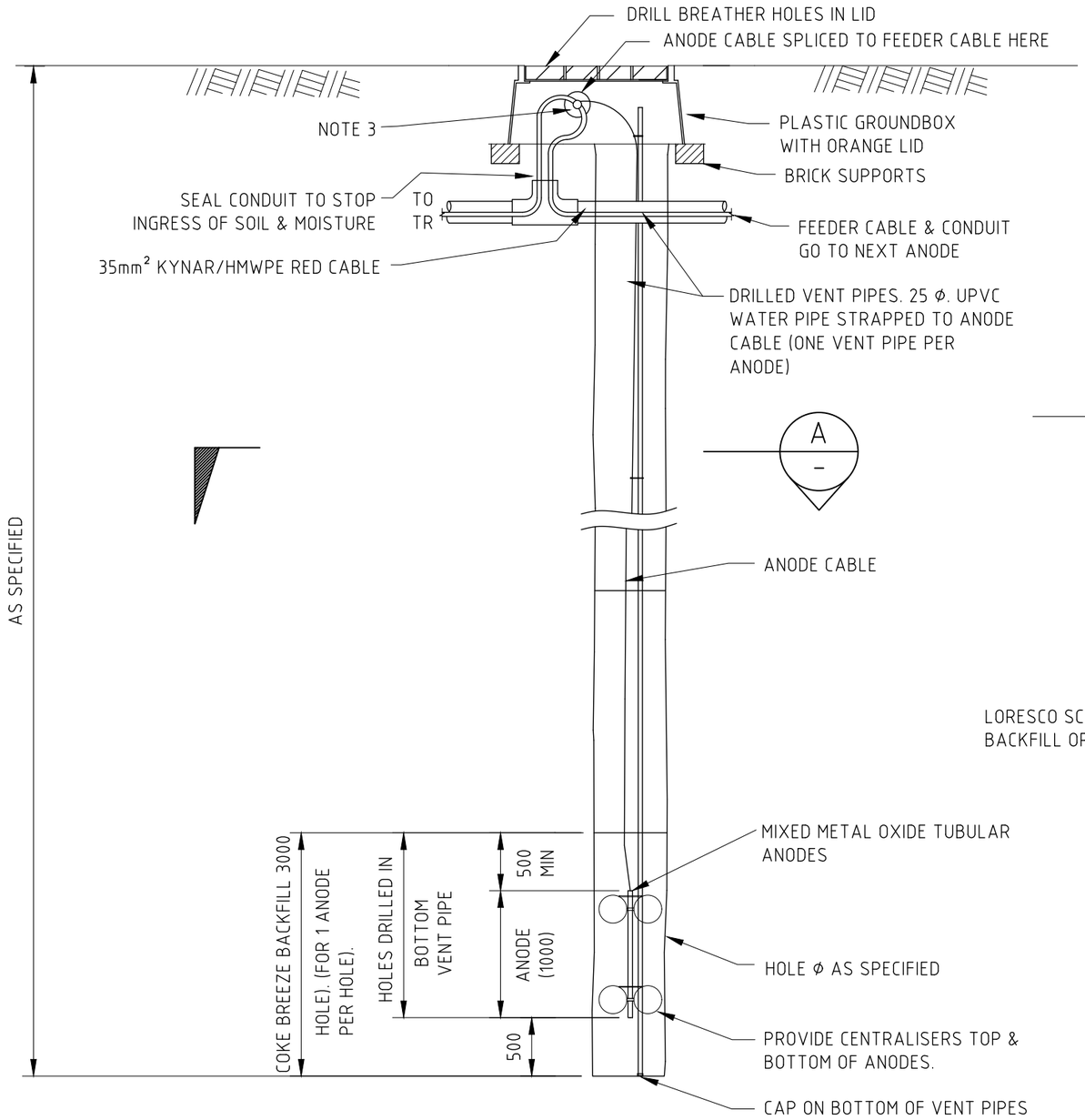

ELEVATION
NOT TO SCALE

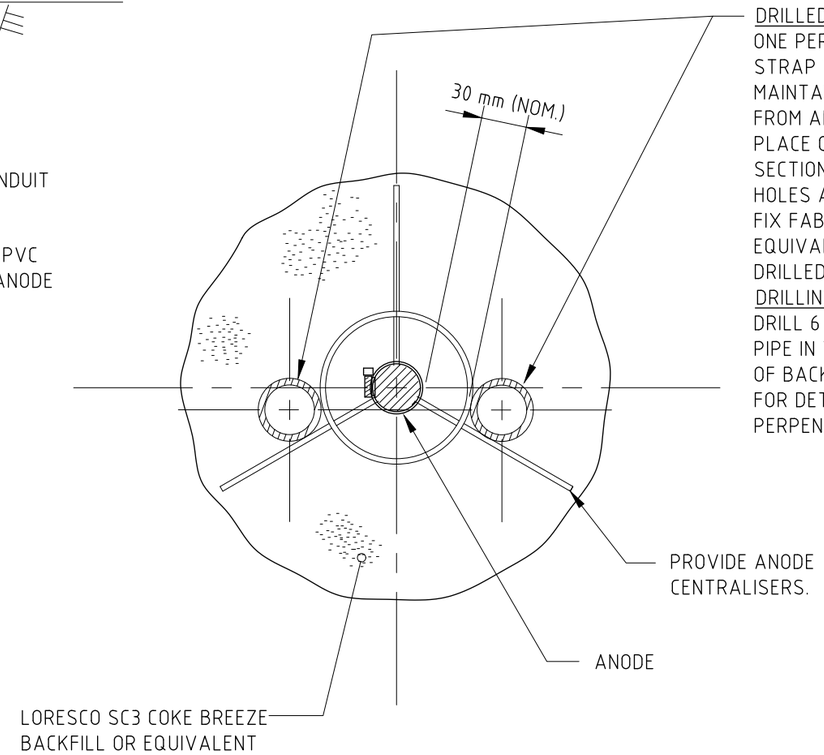

DRILLED VENT PIPE/S
ONE PER ANODE.
STRAP TO ANODE ASSEMBLY.
MAINTAIN 30mm NOMINAL CLEARANCE FROM ANODES USING CENTRALIZERS AS INDICATED.
PLACE GEOFABRIC SOCK OVER DRILLED SECTION OF VENT PIPE/S, ENSURING THAT ALL DRILLED HOLES ARE COVERED BY FABRIC.
FIX FABRIC TO PIPE/S WITH A CABLE TIE, OR EQUIVALENT, ABOVE WHERE THE DRILLED HOLES CEASE.

DRILLING DETAILS
DRILL 6 mm Φ HOLES COMPLETELY THROUGH CENTRE OF PIPE IN THE LOWER PORTION OF VENT PIPES FOR LENGTH OF BACKFILL COLUMN. REF. TO ELEVATION ON THIS DRG. FOR DETAILS. DRILL A SERIES OF SETS OF 2 HOLES PERPENDICULAR TO ONE ANOTHER AT 20mm CENTRES.

SECTION A
NOT TO SCALE

NOTES

1. BACKFILL COLUMN LENGTH TO BE INCLUDED IN THE TECHNICAL SPECIFICATIONS.
2. OTHER CENTRALISER TYPES CAN BE SUBJECT TO APPROVAL BY SA WATER ENGINEERING.
3. WHERE ANODE CABLES ARE NOT TERMINATED DIRECTLY IN A ANODE CONNECTION BOX, CONNECT THE ANODE CABLE TO THE FEEDER CABLE USING A CLIPSAL B24 LINE CLAMP COVERED BY 3M MASTIC TAPE OR SIMILAR AND ELECTRIC TAPES. 3M SCOTCH CAST KITS CAN ALSO BE USED.

SA WATER REFERENCE DRAWINGS:
STD-04-00001_22 (USED AS BASE FOR THIS DRAWING)
STD-04-00001_23 ANODE CENTRALISER DETAILS.

REVISION PANEL

REV	DATE	DRN	DETAILS	APR
0.1A	13.10.23	CSS	60% DESIGN	SW

CURRENT REV 13.10.23
AUTHORISED: M.JERVIS
SIGNATURE:
CURRENT REV CONTRACTOR: WSP
CURRENT REV PROJECT:

DESIGN PANEL

DESIGNED: 13.10.23 R. SHUSTER
DRAWN: 13.10.23 C.SUTCLIFFE
REVIEWED: 13.10.23 S.WHICHELO
AUTHORISED: 13.09.23 M.JERVIS
SIGNATURE:
CONTRACTOR: WSP

Government of South Australia
SA Water

This drawing is the property of the SOUTH AUSTRALIAN WATER CORPORATION and shall not be copied or modified in part or in whole without authorization.

EYRE PENINSULA DESALINATION PLANT

TREATED WATER TRANSFER PIPELINE NETWORK & RETICULATION CATHODIC PROTECTION

A3 SHT SIZE
TOTAL SHEETS:
PROJECT No: A0012-0025
0.1A REVISION
MAXIMO ID: P041992
SUPERSEDES:
DRAWING NUMBER
P041992-05-00003_11