NOTE: NBN "FULL BUILD" SERVICE SHOWN. LEAD-IN AND CONNECTION PIT TO BE UPDATED WHERE OTHER NBN PRODUCTS ARE PROCURED.

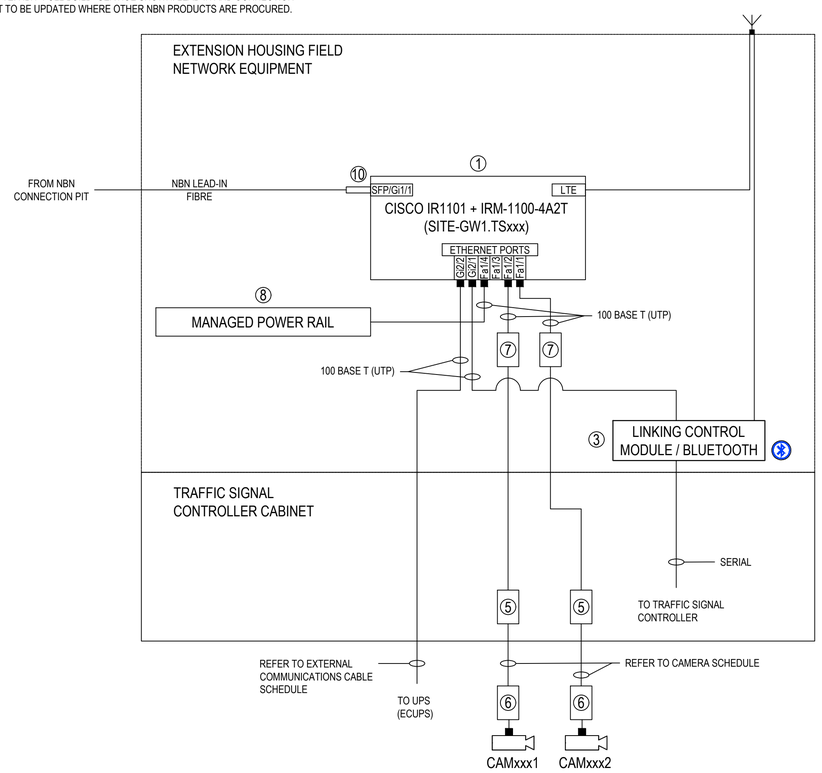

FIELD NETWORK EQUIPMENT CONNECTION DIAGRAM

NOT TO SCALE

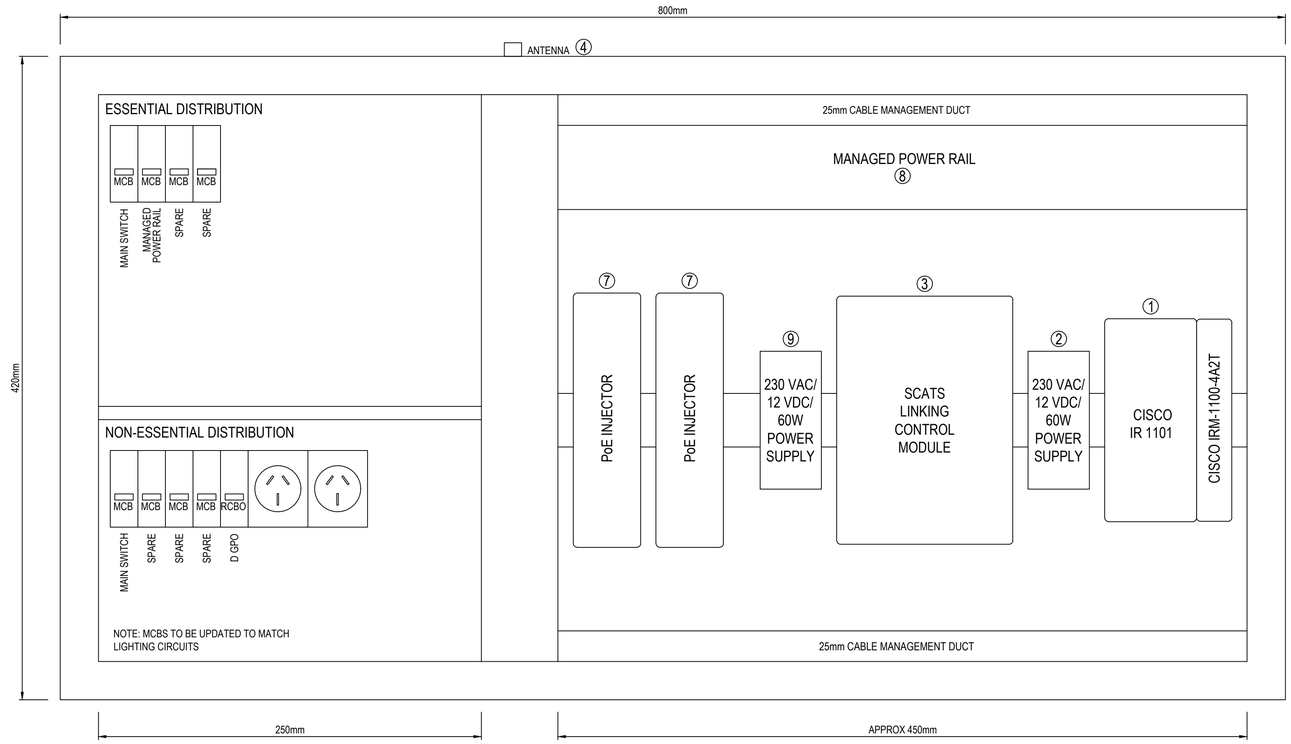

EXTENSION HOUSING CCTV ASSEMBLY

NOT TO SCALE

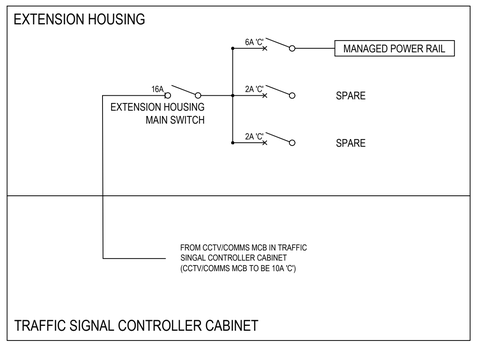

EXTENSION HOUSING ELECTRICAL SINGLE LINE DIAGRAM

NOT TO SCALE

(NON-ESSENTIAL DISTRIBUTION NOT SHOWN)

EQUIPMENT SCHEDULE

DESCRIPTION	ITEM NUMBER	QUANTITY
4G NETWORK ROUTER (CISCO IR1101 + IRM-1100-4A2T)	1	1
ROUTER POWER SUPPLY (MEAN WELL NDR-60-12)	2	1
SCATS LINKING CONTROL MODULE	3	1
ANTENNA	4	1
ETHERNET SURGE PROTECTOR	5 (SEE NOTE 12)	2
ETHERNET SURGE PROTECTOR	6 (SEE NOTE 13)	1
CCTV PoE INJECTOR	7 (SEE NOTE 14)	2
MANAGED POWER RAIL	8 (SEE NOTES 6-11)	1
LCM POWER SUPPLY (MEAN WELL NDR-60-12)	9	1
NOKIA SFP TRANSCEIVER	10	1
ETHERNET PATCH LEADS	-	AS REQ'D

CAMERA SCHEDULE

CAMERA TYPE	DIT ASSET ID	MODEL	LOCATION	CABLE ID	CABLE TYPE	APPROX LENGTH (m)
PTZ CAMERA	CAMxxx1	AXIS Q6315-LE PTZ DOME	SIGNAL POLE 1	E-TSxxx-CAMxxx1	8/UTP CAT6	50
PTZ CAMERA	CAMxxx2	AXIS Q6315-LE PTZ DOME	SIGNAL POLE 6	E-TSxxx-CAMxxx2	8/UTP CAT6	60

EXTERNAL COMMUNICATIONS CABLE SCHEDULE

CABLE ID	FROM	TO	CABLE TYPE	APPROX LENGTH (m)
E-TS065-UPS	SITE-GW1.TSxxx PORT 6	UPS CABINET	8/UTP CAT6	10

NOTES:

1. CISCO IR1101 4G ROUTER TO BE SUPPLIED WITH LTE MODULE AND CISCO RM-1100-4A2T EXPANSION MODULE.
2. THE ANTENNA MUST SUPPORT BOTH BLUETOOTH CAPTURING FUNCTION AS SPECIFIED IN RD-ITS-D1 AND LTE.
3. WHERE LTE IS USED BEFORE THE CONNECTION OF NBN, THE ANTENNA'S LTE ELEMENT MUST BE CONNECTED TO THE LTE MODULE OF THE ROUTER FOR LTE COMMUNICATION.
4. THE ANTENNA'S BLUETOOTH AND WIFI ELEMENTS MUST BE CONNECTED TO THE LINKING CONTROL MODULE.
5. THE ANTENNA MUST BE INSTALLED NO GREATER THAN 50mm FROM THE EDGE OF THE EXTENSION HOUSING.
6. INSTALLATION OF THE ANTENNA MUST MAINTAIN THE INGRESS PROTECTION RATING OF THE EXTENSION HOUSING.
7. MANAGED POWER RAIL MUST COMPLY WITH THE REQUIREMENTS OF RD-ITS-S1 AND:
   a) SUPPORT REMOTE OUTLET SWITCHING;
   b) SUPPORT SEQUENCED START-UP OF OUTLETS;
   c) SUPPORT METERING PER INPUT LINE;
   d) SUPPORT ETHERNET NETWORKING;
   e) SUPPORT IEC PLUGS;
   f) OPERATE IN TEMPERATURES UP TO +55°C; AND
   g) BE SUITABLY RATED FOR REQUIRED LOADS.
7. MANAGED POWER RAIL MUST BE PROGRAMMED TO SWITCH SOCKET OUTLETS SEQUENTIALLY TO PREVENT POWER SUPPLY IN-RUSH CURRENT TRIPPING POWER RAIL CIRCUIT BREAKER.
8. SOCKET OUTLETS MUST BE SEQUENTIALLY SWITCHED AS FOLLOWS.
   a) NETWORK ROUTER POWER SUPPLY;
   b) LINKING CONTROL MODULE POWER SUPPLY; AND
   c) CCTV PoE INJECTOR (CAMxxx1;) AND
   d) CCTV PoE INJECTOR (CAMxxx2).
9. CAPTIVE IEC PLUGS MUST BE USED FOR EQUIPMENT CONNECTED TO THE MANAGED POWER RAIL.
10. MANAGED POWER RAIL SOCKETS MUST BE LABELLED WITH THE EQUIPMENT CONNECTED.
11. MANAGED POWER RAIL MUST BE LABELLED WITH LOAD LIMIT OF 6A.
12. ETHERNET SURGE PROTECTION TO BE INSTALLED AS CLOSE AS POSSIBLE TO THE BOTTOM OF THE TRAFFIC SIGNAL CABINET.
13. CAMERA ETHERNET SURGE PROTECTION TO BE INSTALLED IN POLE ACCESS HATCH.
14. CCTV PoE INJECTOR MUST COMPLY WITH THE REQUIREMENTS OF RD-ITS-S1 AND:
   a) BE SUITABLY RATED FOR CCTV CAMERA LOADS; AND
   b) OPERATE IN TEMPERATURES UP TO +55°C.
13. ALL TELECOMMUNICATIONS CABLES, INCLUDING INTERNAL PATCH LEADS AND EXTERNAL CABLES, MUST BE LABELED IN ACCORDANCE WITH RD-ITS-C3.
14. THE CONTRACTOR MUST SUBMIT EQUIPMENT DETAILS FOR DIT APPROVAL PRIOR TO PROCUREMENT IN ACCORDANCE WITH RD-ITS-S1.
15. CISCO IR1101 LTE MODULE MUST BE CONNECTED TO ANTENNA TO ENABLE WIRELESS OPERATIONS PRIOR TO NBN SERVICE BEING DELIVERED.

No.	AMENDMENT DESCRIPTION	BY	CHECK	ACCEPTANCE	DATE

INDEX SHEET REFERENCE: - SHEET -

UNCONTROLLED COPY WHEN PRINTED ◄ 100 MILLIMETRES ON ORIGINAL DRAWING ► ALL DIMENSIONS ARE IN METRES UNLESS SHOWN OTHERWISE

DESIGNED - QUALIFICATION - DATE: -
REVIEWER - QUALIFICATION - DATE: -
INDEPENDENT DESIGN CERTIFIER (IF REQUIRED) - QUALIFICATION - DATE: -

Government of South Australia
Department for Infrastructure and Transport

PROJECT No.: - FILE No.: -
DESIGN No.: - SURVEY No.: -
PROJECT START ROAD RUNNING DISTANCE: -
PROJECT END ROAD RUNNING DISTANCE: -
SCALES: NOT TO SCALE

STANDARD DRAWING
TRAFFIC SIGNALS
EXTENSION HOUSING EQUIPMENT
NETWORK CONNECTION DIAGRAM AND CABINET LAYOUT FOR NBN CONNECTION

SIGNAL No.: TSxxx

DESIGNED:	DRAFTED:	ACCEPTED FOR USE:	ACCEPTANCE FORM KNET No.:	DRAWING No.:	SHEET No.:	AMEND No.:
MM	-	Y. Xiao TITLE: PRINCIPAL ELEC ENG DATE: 29.04.2025	22913879 IN ACCORDANCE WITH DP013	S-4055	79	A

SHEET LATITUDE SHEET LONGITUDE

CAD FILE NAME: NSC-MMD-DRG-0000-11-065X02.DWG