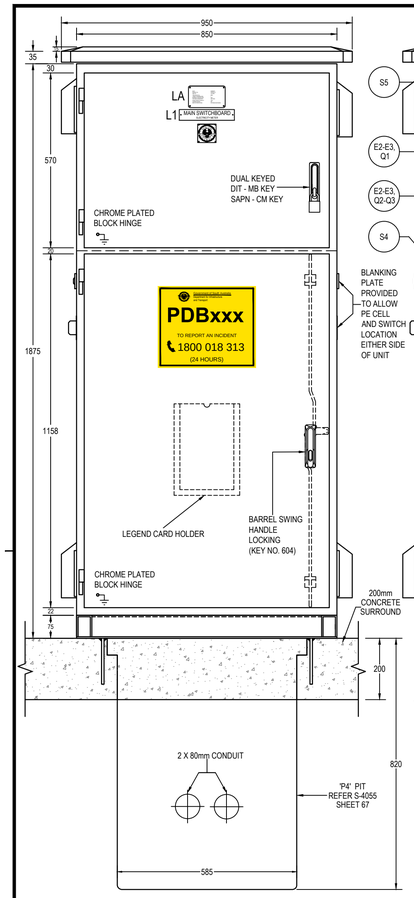

FRONT ELEVATION

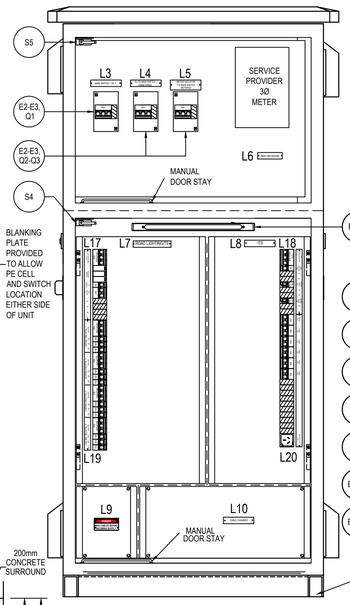

FRONT ELEVATION
EXTERNAL DOOR REMOVED

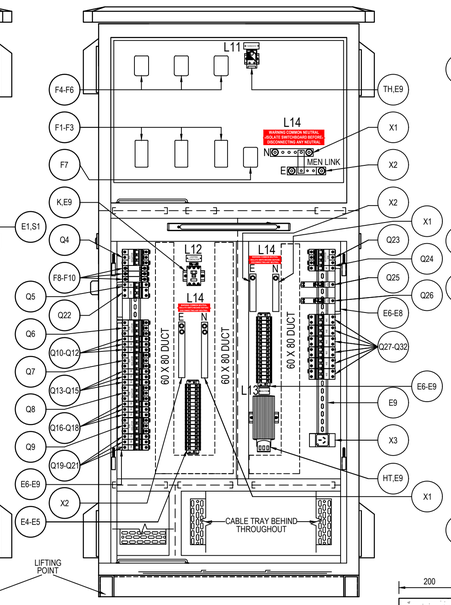

FRONT ELEVATION
ESCUTCHEON REMOVED

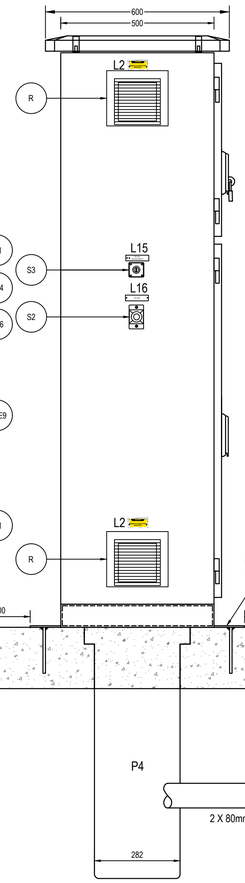

LEFT ELEVATION

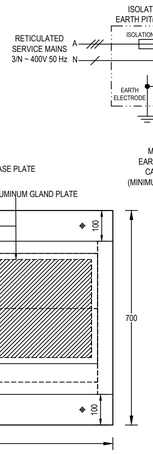

BASE PLATE DETAILS

LABELS

NOTE: ALL LABELS TO BE RETAINED WITH SECURITY PINS

LA

DATE	DD/MM/YY
PROJECT No	PROJECT #
PART OF	AS.3439.1
TYPE OR CAT No	MSB
FORM OF SEGREGATION	1
DEGREE OF PROTECTION	IP54
VOLTAGE & FREQUENCY	400V, 50Hz
SHORT CIRCUIT CAPACITY	10kA
CURRENT RATING	63A
BACK UP PROTECTION	SA POWER NETWORKS

L1 MAIN SWITCHBOARD — ELECTRICITY METER

L2 REMOVE & CLEAN FILTERS REGULARLY — X 4

L3 MAIN SWITCH 1 OF 1

L4 RL/TS MAIN SWITCH UNMETERED

L5 ITS MAIN SWITCH METERED

L6 MEN LINK BEHIND

L7 ROAD LIGHTING/TS

L8 ITS

L9 DANGER — 400V CABLES BEHIND INCOMING SUPPLY

L10 CABLE CHAMBER

L11 THERMOSTAT

L12 LIGHTING CONTACTOR

L13 HEATER

L14 WARNING COMMON NEUTRAL ISOLATE SWITCHBOARD BEFORE DISCONNECTING ANY NEUTRAL — X 3

L15 PE CELL BYPASS SWITCH

L16 PE CELL

L17 — E2 | N | E2 | E1 | TS SUPPLY (W1) | CONTROL (R1) | SURGE DIVERTERS | RL/TS MAIN ISOLATOR

L18 — ITS MAIN ISOLATOR | SWB LIGHTING W4 | HEATER RCBO B4 | WC | SOCKET OUTLET RCBO B5 | W5 | B6

L19 — LIGHTING CIRCUIT No. 4: CB12 CB11 CB10 ISOLATOR | LIGHTING CIRCUIT No. 3: CB9 CB8 CB7 ISOLATOR | LIGHTING CIRCUIT No. 2: CB6 CB5 CB4 ISOLATOR | LIGHTING CIRCUIT No. 1: CB3 CB2 CB1 ISOLATOR

L20 — ITSXXX (R7) | ITSXXX (W7) | ITSXXX (B7) | ITSXXX (R8) | ITSXXX (W8) | ITSXXX (B8) | SOCKET OUTLET (10A)

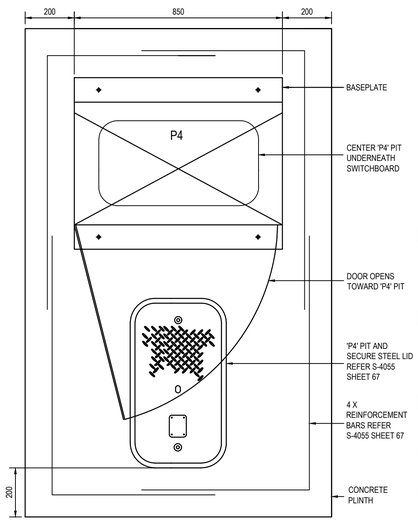

PLAN VIEW

EQUIPMENT SCHEDULE

(EQUIPMENT ITEMS CAN BE SUBSTITUTED WITH AN EQUIVALENT - WHERE APPROVED BY THE PRINCIPAL)

REF.	ITEM DISCRIPTION	MANUFACTURER	QTY.	ITEM NO.
F1-F3	FUSE HOLDERS	IPD	3	S71002AFWS
F4-F6	SEALED ACTIVE LINKS	NETEC	3	AN140-4T35-R
F7	SEALED NEUTRAL LINK	NETEC	1	AN140-4T35-B
F8-F10	SURGE DIVERTERS 230V 50Hz Imax 40kA	SCHNEIDER	3	A9L40100
X1	NEUTRAL BAR	-	3	-
X2	EARTH BAR	-	3	-
X3	SOCKET OUTLET	HAGER	1	SNO10DA
Q1	MAIN SWITCH, 63A, 10kA, 3P, 'TYPE C'	SCHNEIDER	1	A9F54363
Q2-Q3	MAIN SWITCH, 32A, 10kA, 3P, 'TYPE C'	SCHNEIDER	2	A9F54332
Q4,Q6-Q9, Q23	ISOLATOR, 63A, 3P	SCHNEIDER	6	A9S66363
Q5	CCT. BKR., 1P, 6A, 6kA, TYPE 'C'	SCHNEIDER	1	A9F44106
Q10-Q21	CCT. BKR., 1P, 16A, 6kA, TYPE 'C'	SCHNEIDER	12	A9F44116
Q22, Q27-Q32	CCT. BKR., 2P, 20A, 10kA, TYPE 'C'	SCHNEIDER	7	A9F54232
Q24	CCT. BKR., 1P, 2A, 6kA, TYPE 'C'	SCHNEIDER	1	A9F44102
Q25-Q26	RCBO, 1P+N, 10A, 30 mA, 6kA	SCHNEIDER	1	A9D14810
TH	THERMOSTAT 1xN/C HEATING	NHP	1	KTO11100000
HT	HEATER-ANTI CONDENSATION 100W	NHP	1	CS06010000
R	GRILL & FILTER 150mm - IP54 RATED	COSMOTEC	4	GHF15
E1,S1	LED LIGHT 8W, WITH SWITCH	FANDIS	1	CLG-L307
S2	MINIATURE PHOTOCELL	ROYCE THOMPSON	1	MICROSTAR 2000 IP65
S3	KEY SWITCH	KRAUS & NAIMER	1	CA10.A201.E.AU29
S4,S5	DOOR ALARM SWITCH	-	-	-
K	CONTACTOR	SPRECHER & SCHUH	1	CA7-37-00-240
E2	PADLOCKING DEVICE	SCHNEIDER	3	A9A26380
E3	MAIN SWITCH ENCLOSURE	SCHNEIDER	3	13394
E4	TERMINALS 16mm²	CONNECTWELL	A.R.	CTS16U
E5	END STOP	CONNECTWELL	A.R.	CA102
E6	3P BUS COMB END CAP	SCHNEIDER	A.R.	A9XPE310
E7	3P BUS COMB-24 MODULES-100A	SCHNEIDER	A.R.	A9XPH324
E8	TOOTH CAPS	SCHNEIDER	A.R.	A9XPT920
E9	DIN RAIL	-	-	-

A.R. = AS REQUIRED

CONSTRUCTION NOTES
FULLY FOLDED, WELDED, GROUND SMOOTH 1.6mm GALVANISED SHEET STEEL
ALL DOOR HARDWARE TO BE CHROME PLATED
DOORS FITTED WITH 20 x 6mm NEOPRENE RUBBER
DUST SEALS HELD IN CHANNELS
FINISH:PREPARATION:WASH WITH SUITABLE SOLVENT, WIPE OFF RESIDUE, PRIME ALL CUT EDGES AND GROUND
SURFACES WITH A ZINC RICH PRIMER
FINAL FINISH: POLYESTER POWDER COAT, RIPPLE FINISH
INTERNAL MOUNTING PANS & ESCUTCHEONS: WHITE
CUBICLE & DOORS: ANTI GRAFFITI HAWTHORN GREEN

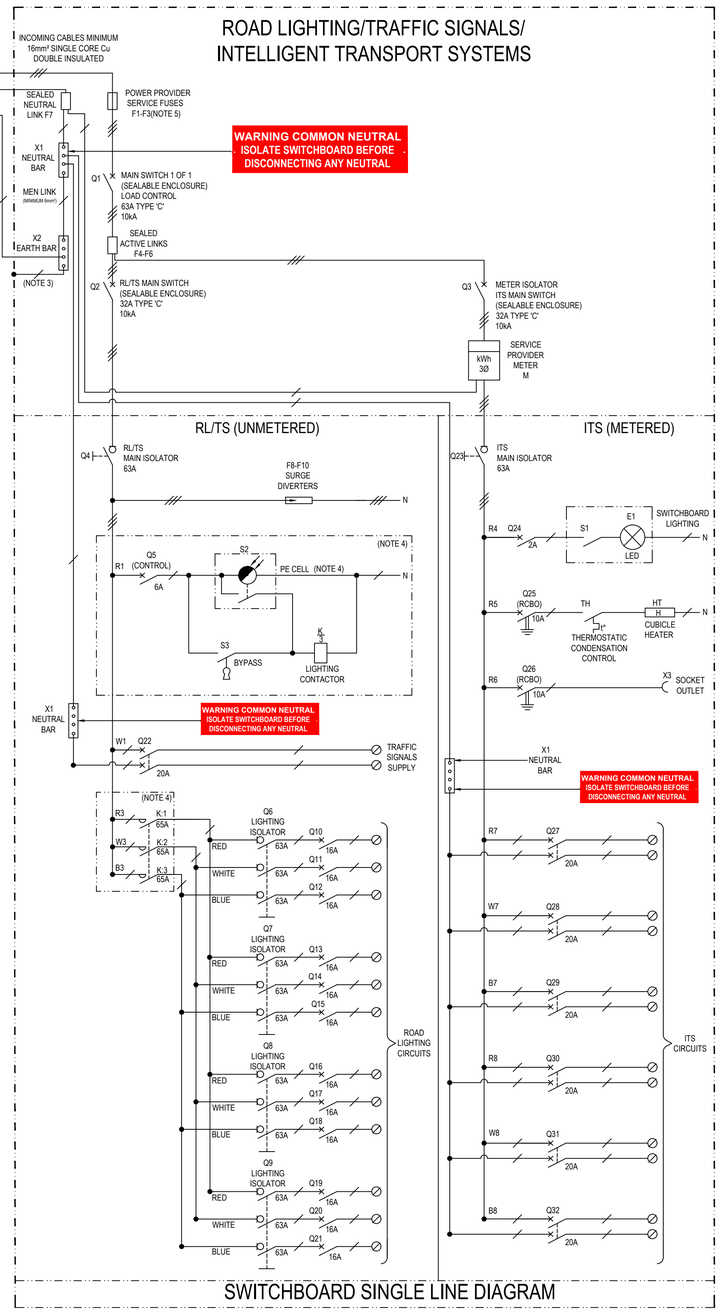

SWITCHBOARD SINGLE LINE DIAGRAM

NOTES:

1. ALL VALUES AND LAYOUTS ARE TYPICAL AND SUBJECT TO ELECTRICAL DESIGN.
2. WHERE EARTH ELECTRODE IS LOCATED IN AN ISOLATION / EARTH PIT BETWEEN THE SUPPLY POINT AND SWITCHBOARD, THE ISOLATION / EARTH PIT MUST BE LOCATED AS CLOSE AS POSSIBLE TO THE SWITCHBOARD BUT NO LESS THAN 5m.
3. SWITCHBOARD ENCLOSURE MUST BE BONDED TO THE EARTH BAR INSIDE THE SWITCHBOARD.
4. FOR SMART LIGHTING CONTROLLED CIRCUITS, REMOVE PE CELL CIRCUITRY AND LIGHTING CONTACTOR, AND CONNECT LIGHTING ISOLATORS DIRECTLY TO THE MAIN SUPPLY.
5. POWER PROVIDER SERVICE FUSES ARE ONLY USED FOR UNPROTECTED CONSUMER MAINS.
6. SEALED CABLE SIZE CONVERTER MAY BE REQUIRED WHERE INCOMING CABLE SIZE EXCEEDS 35mm².

THIS SHEET SUPERSEDES DRAWING S-4055 SHEET 54

No.	AMENDMENT DESCRIPTION	BY	CHECK	ACCEPTANCE	DATE

UNCONTROLLED COPY WHEN PRINTED ◄ 100 MILLIMETRES ON ORIGINAL DRAWING ► ALL DIMENSIONS ARE IN MM UNLESS SHOWN OTHERWISE

Government of South Australia

Department of Planning, Transport and Infrastructure

PROJECT No.: N/A	FILE No.: N/A
DESIGN No.: N/A	SURVEY No.: N/A
PROJECT START ROAD RUNNING DISTANCE: N/A	
PROJECT END ROAD RUNNING DISTANCE: N/A	
SCALES: NOT TO SCALE	

STANDARD DRAWING

ELECTRICAL SWITCHBOARD

UNMETERED/METERED THREE PHASE

ROAD LIGHTING, TRAFFIC SIGNALS AND INTELLIGENT TRANSPORT SYSTEMS TYPE E

DESIGNED:	DRAFTED: MR	CHECKED: YX	ACCEPTED FOR USE: YANYAN XIAO	TITLE: PRINCIPAL ELECTRICAL ENGINEER	DATE: 18.11.2026	ACCEPTANCE FORM KNET No.: 25585904	DRAWING No.: S-4055	SHEET No.: 0090	AMEND No.: 0

SHEET LATITUDE N/A SHEET LONGITUDE N/A

CAD FILE NAME: S-4055 SHEET 0090 AMOD.DWG