Road Structures Inspection Manual

Appendix A: Description of Structures and Structure Elements

dpti.sa.gov.au

@DPTI_SA @DPTISA

Government of South Australia
Department of Planning, Transport and Infrastructure

Road Structures Inspection Manual

Appendix A: Description of Structures and Structure Elements
Department of Planning, Transport and Infrastructure, South Australia

For further information regarding DPTI Road Structures Inspection Manual please contact:

The Principal Engineer Structures
Road Assets Section
Level 4, 77 Grenfell Street
Adelaide SA 5000

www.dpti.sa.gov.au

RAMA Document No: RAMA-ST-PRC-048
Knet Document No: 14677975
Document version: 1.0 (05/11/2019)

Previously, this document was called the Bridge Inspection Manual.
First published in 2003 then revised in 2005, 2008 and 2019.

Disclaimer
Every effort has been made to supply complete and accurate information. This document is subject to continual revision and may change. It is the user's responsibility to check DPTI's website to ensure that the current version is being used.

Feedback: Please send your feedback regarding this document to:
DPTI.bmu@sa.gov.au

TABLE OF CONTENTS

LIST OF FIGURES

DESCRIPTION OF STRUCTURES

1. General Terminology for Bridges

More detailed descriptions of bridge structure elements is included in "Description of Bridge Elements" later in this document.

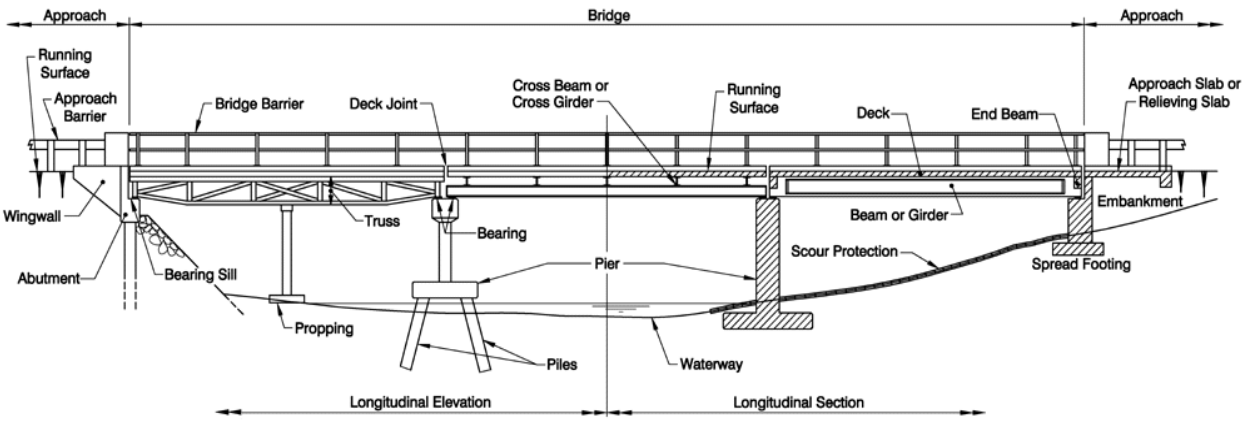

Figure 1: General bridge terminology

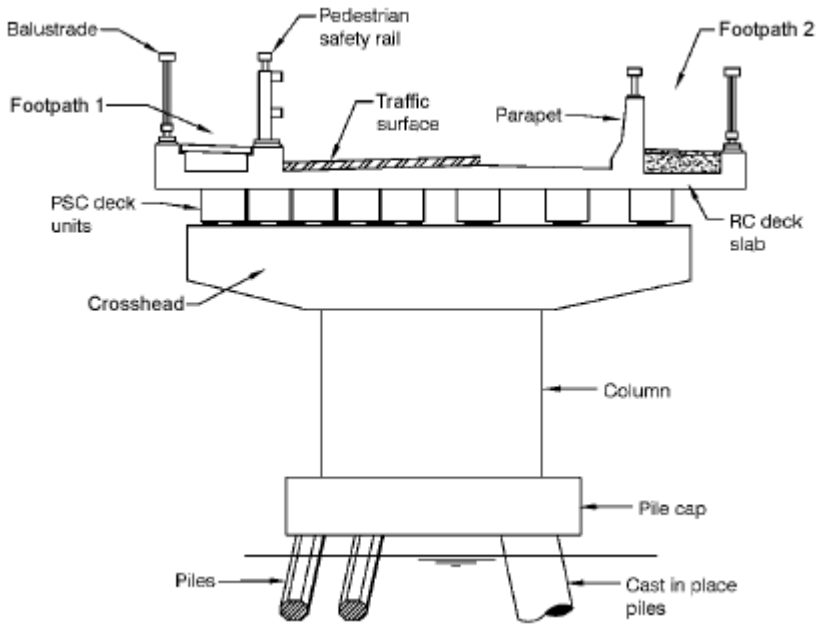

Figure 2: Pier and deck (typical prestressed concrete deck unit bridge)

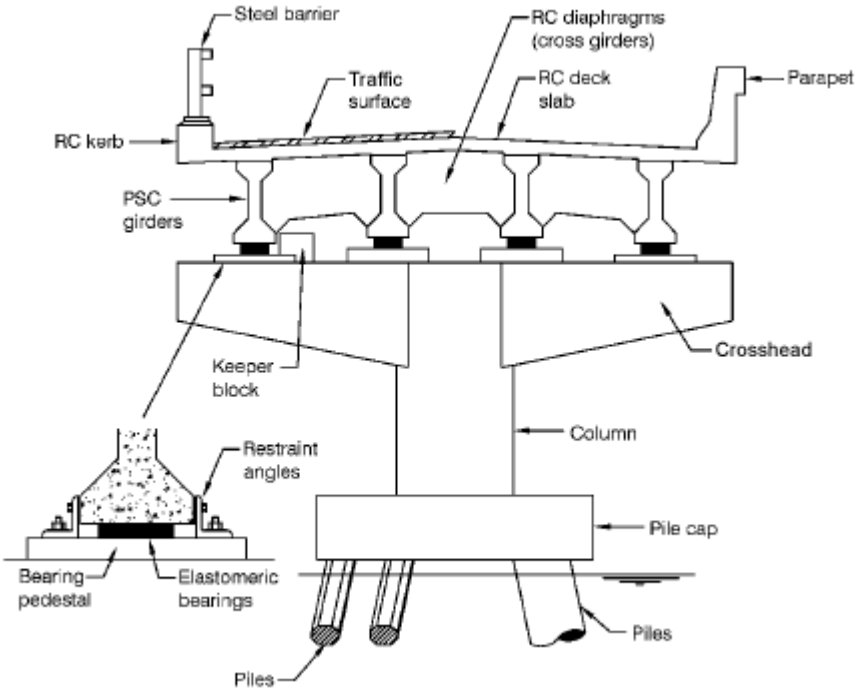

Figure 3: Pier and deck (typical prestressed concrete girder bridge)

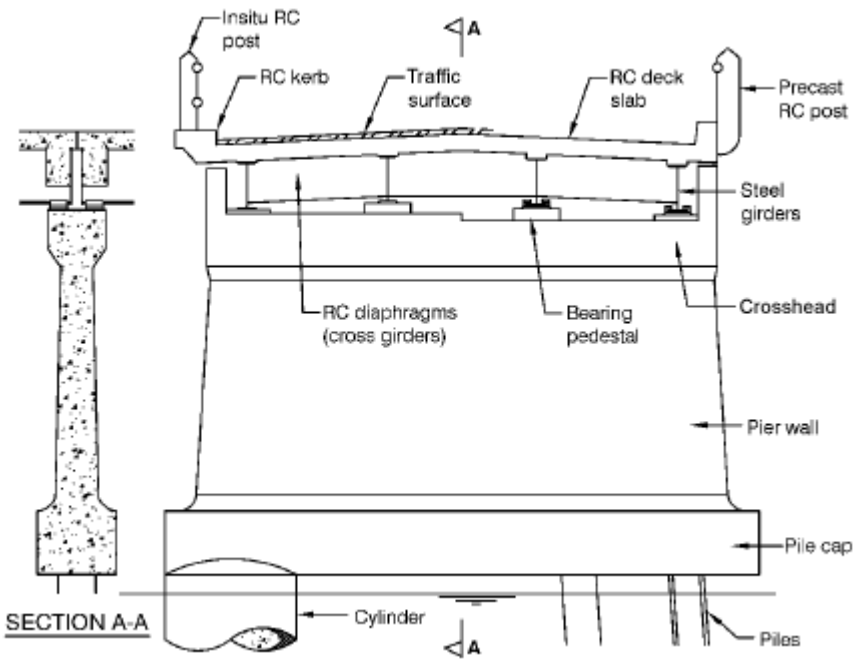

Figure 4: Pier and deck (typical steel girder bridge)

2. Terminology for Timber Bridges

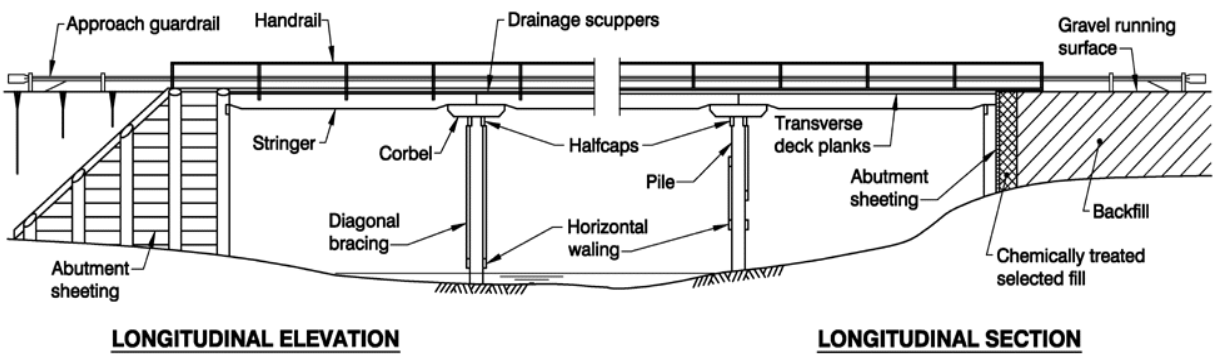

Figure 5: Timber bridge terminology

3. Terminology for Masonry Arches

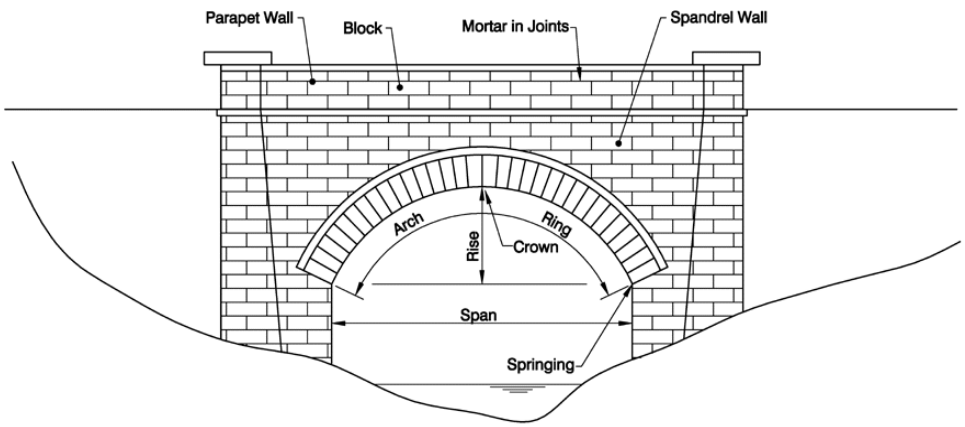

Figure 6: Masonry arch terminology

4. Terminology for Culvert Structures

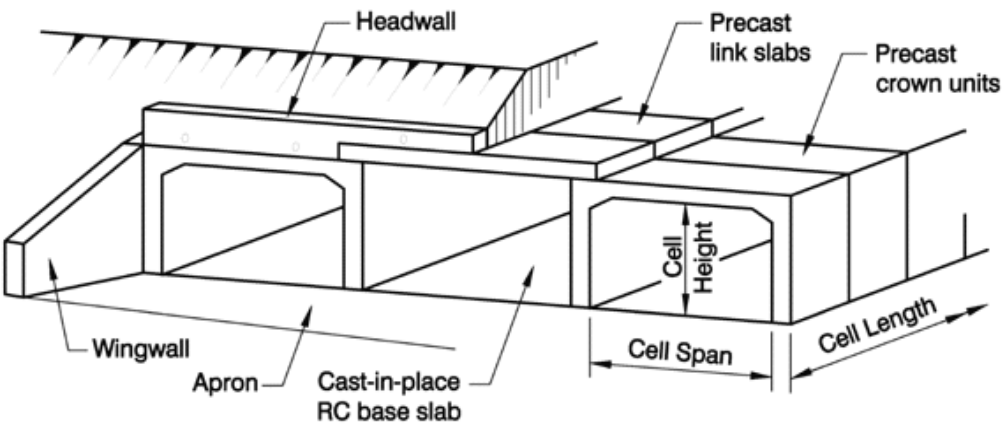

Figure 7: Precast Crown Units

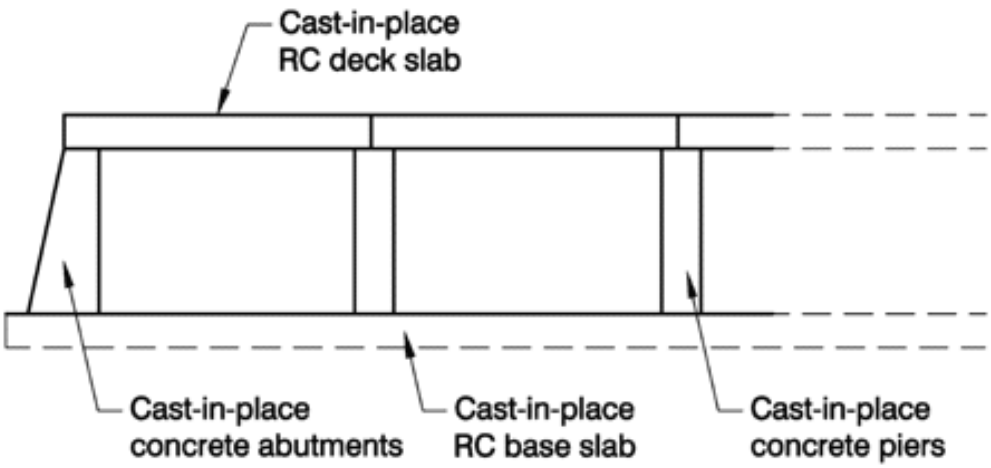

Figure 8: Slab Deck Culvert

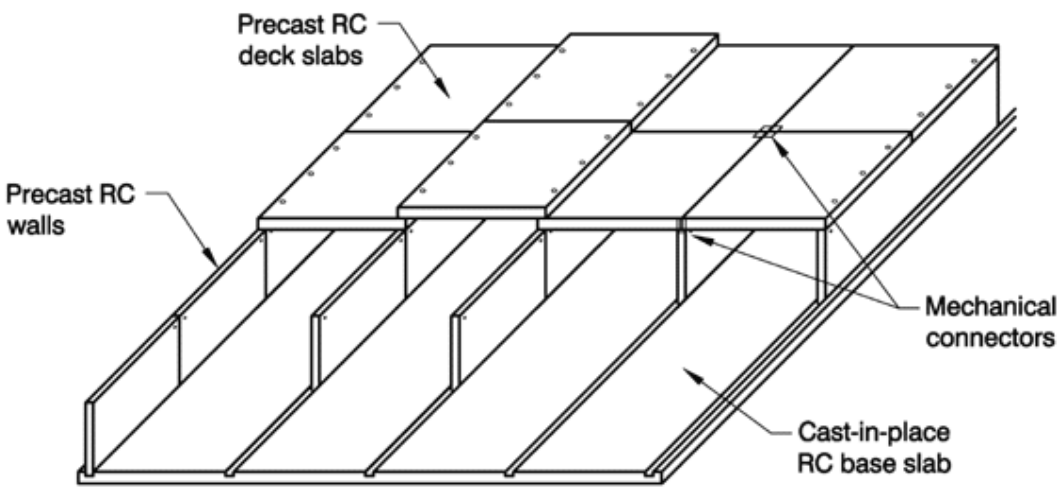

Figure 9: Modular Culvert

5. Corrugated Metal Structures

These structures have been used for many decades, and are usually fabricated as hot-dip galvanised steel segments. Site assembly is completed using high strength bolts. The surrounding embankment is constructed in layers during the backfilling.

Performance of these structures in watercourses has been disappointing at times due to erosion and subsequent failure of the invert due to abrasion by waterborne hard debris and grit. However, many other sites reveal that this choice provides a durable structure.

Often, the lower segment plates are cut to match the embankment profile, forming the end wingwalls.

Sometimes concrete or gabion headwalls are provided.

5.1 Types of structures

- Circular pipes
- Pipe-arches
- Arches
- Elliptical super span with thrust blocks
- Other cross sections

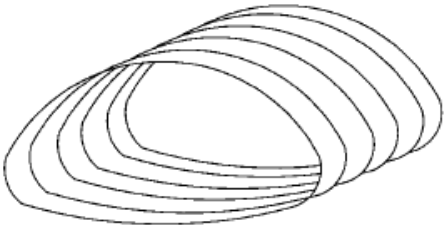

Figure 10: Corrugated steel plate pipe arch

Figure 11: Corrugated metal structure

Figure 12: Corrugated metal structure

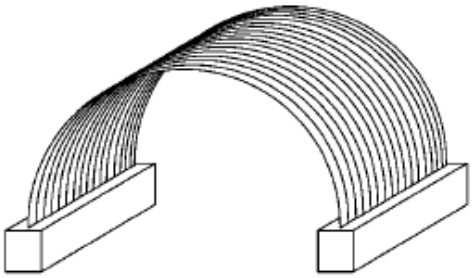

Figure 13: Corrugated steel plate open footing arch

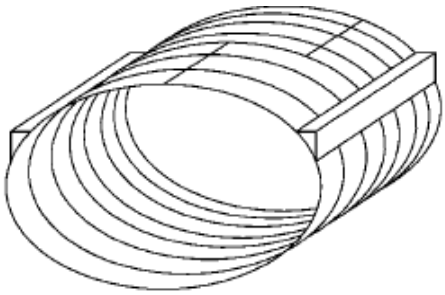

Figure 14: Corrugated steel plate superspan ellipse

6. Timber Bridges

Timber has diminished as a desirable choice of material due to a number of factors including:-

- Shorter working life in general due to numerous factors
- High maintenance and repair cost
- High fire damage risk
- Termite attack risk

Decay is the most serious timber defect and is the reason for most timber bridge maintenance needs.

Timber as a bridge building material is not durable unless it is appropriately treated and well maintained.

Figure 15: Timber bridge

7. Masonry Arch Bridges

Design and construction of these mainly durable bridges is essentially a lost art.

Numerous examples are still providing an effective link in the road network.

Figure 16: Masonry arch bridge

8. Truss Bridges

Truss bridges are a type of bridge whose main element is a truss which is a structure of connected elements that form triangular units. Truss bridges appeared very early in the history of modern bridges and were economic to construct because they use materials efficiently.

Figure 17: Truss bridge

Truss bridges can have the deck on top (deck truss), in the middle (through truss), or at the bottom of the truss. If the sides of the truss extend above the deck but are not connected, it is called a pony truss or half-through truss. Bridges with the deck at the top or the bottom are the most common as this allows both the top and bottom to be stiffened, forming a box truss.

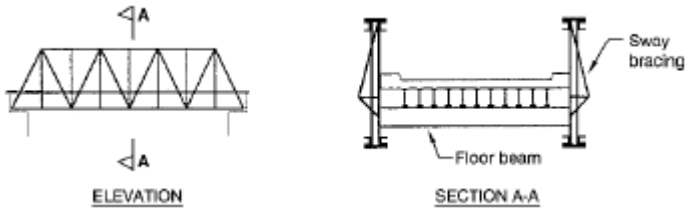

Figure 18: Half through (Pony) truss and cross-section

Figure 19: Pony truss bridge

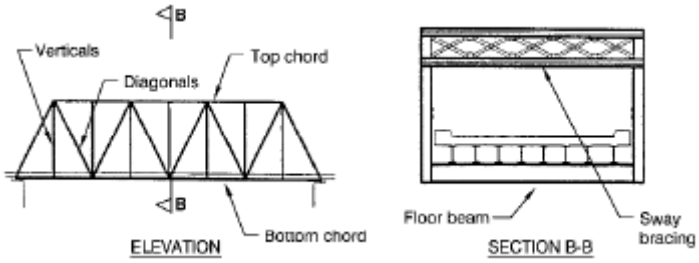

Figure 20: Through truss and cross-section

Figure 21: Through truss bridge

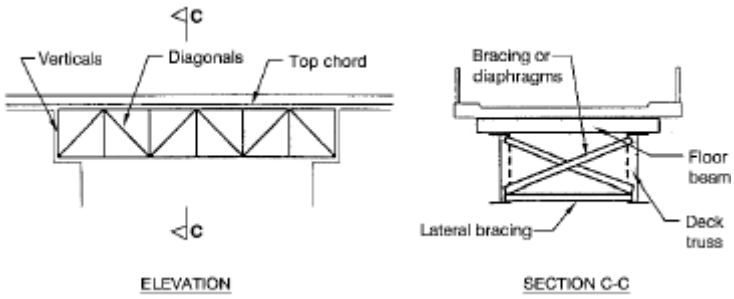

Figure 22: Deck truss and cross-section

Figure 23: Deck truss bridge

9. Major Sign / Gantry Structures

These support large roadway signs, signal lights, and a number of types of changeable or movable sign systems. The signs can be a combination of the foregoing.

The gantries can be cantilever type, which usually are fitted with single sided signs or butterfly type with signs both sides of the column.

Portal type gantries often span across both directional carriageways and in that case usually support signs on both faces.

Where they span across unidirectional lanes only, they are usually fitted with signs on one face only.

Inspection is primarily devoted to the structural condition aspects of the gantry, foundations, fittings, and the sign with its attachments. Where electrical and electronic devices are included that are part of the movable/changeable signs, only the physical condition of those components are reported.

The functioning of the Changeable Message Signs/Variable Message Signs aspects of those signs is the maintenance responsibility of other areas of DPTI.

Support is provided by reinforced concrete footings at the edge(s) of the road. Steel is used in the construction of the gantries. They may have hot-dip galvanizing for corrosion protection, paint coats, or both applied.

Figure 24: Portal type gantry

Figure 25: Cantilever type gantry (with damage)

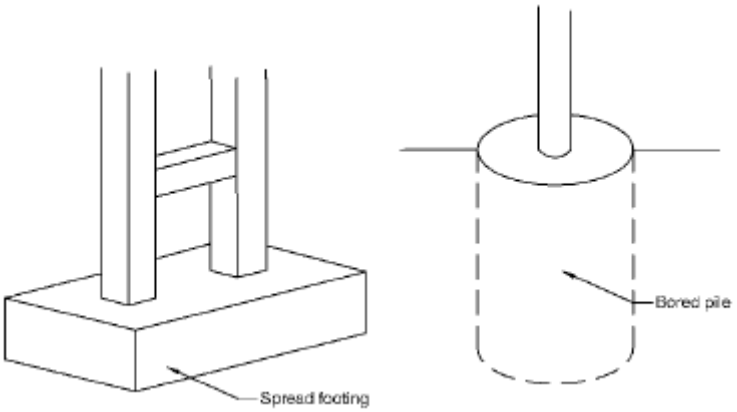

Figure 26: Gantry foundations

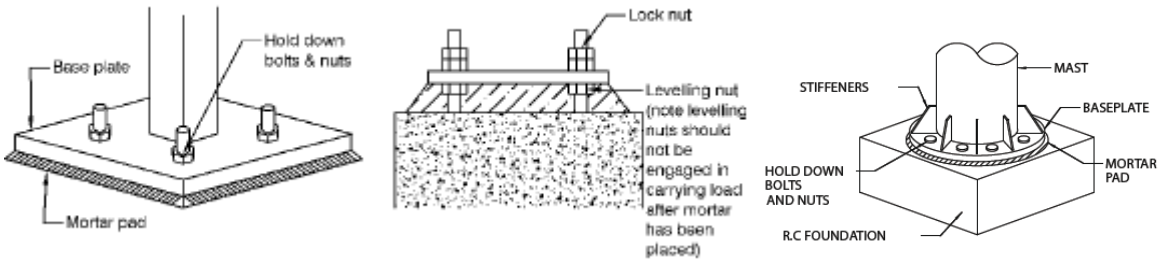

Figure 27: Gantry base plates

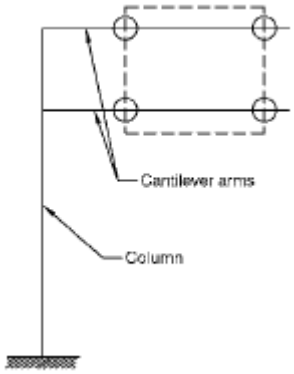

Figure 28: Cantilever sign

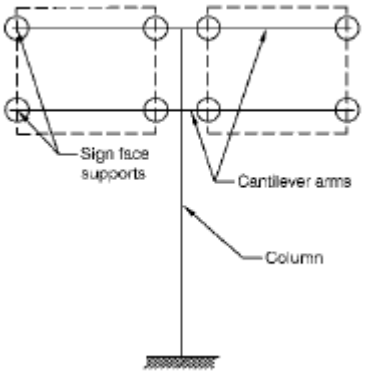

Figure 29: Butterfly cantilever sign

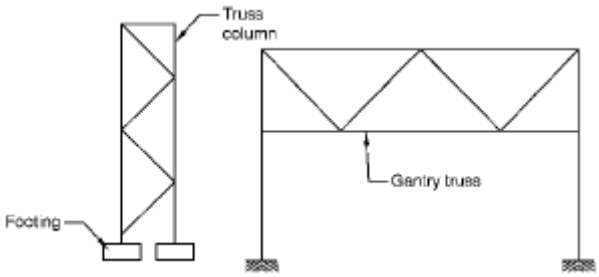

Figure 30: Gantry structure

10. Retaining Walls

Retaining walls are structures where the dominant function is to act as a retaining structure for embankments or fill slopes be they above, below or either side of the carriageway.

A variety of structural forms are employed across the network including:

- Gravity wall – resist earth pressures through own self weight. Examples of gravity walls include:
    - mass concrete monolithic walls
    - unreinforced masonry walls
    - gabion baskets (i.e. woven steel wire baskets filled with stone)
    - crib walls (reinforced concrete or timber crib units filled with free draining material)
    - soil nail walls (soil nails are drilled and grouted bars (normally threaded steel bar or reinforcement) installed on a regular grid pattern to reinforce the soil creating a gravity retaining wall for permanent or temporary excavation support). They typically secure a facing support of shotcrete and/or mesh with a nut and plate or cogged end.
    - reinforced soil/mechanically stabilised earth walls (soil nailing or anchoring using steel or geotextile reinforcement to stabilise retained material).
- Cantilever on foundation wall – comprise a vertical wall rigidly fixed to a horizontal foundation slab. Horizontal earth pressures are transferred to the foundation (primarily in bending). These types of wall are typically constructed of reinforced concrete.
- Embedded retaining wall – these types of wall are similar to cantilever on foundation walls with the exception that there is no horizontal foundation. Retention of fill is achieved through depth of embedment. Examples of embedded retaining walls include:
    - sheet piles, driven steel, concrete or timber piles
    - insitu concrete bored pile walls. Can be contiguous or secant piled walls.
- Soldier pile walls – comprise driven (steel, timber or precast concrete) or insitu concrete vertical piles installed at regular centres with sheeting spanning between the piles. Sheeting may be steel, precast concrete or timber.
- Revetment walls – a relatively thin, lightly reinforced cast in-situ concrete wall built against a stable slope to prevent erosion.

Figure 31: Concrete crib wall

Figure 32: Gabion basket wall

Figure 33: Steel pile and concrete panel wall

Figure 34: Sheet pile wall

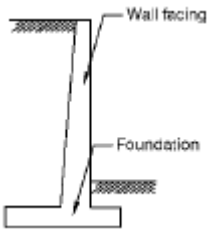

Figure 35: Reinforced concrete gravity wall

Figure 36: Soil nail wall under construction

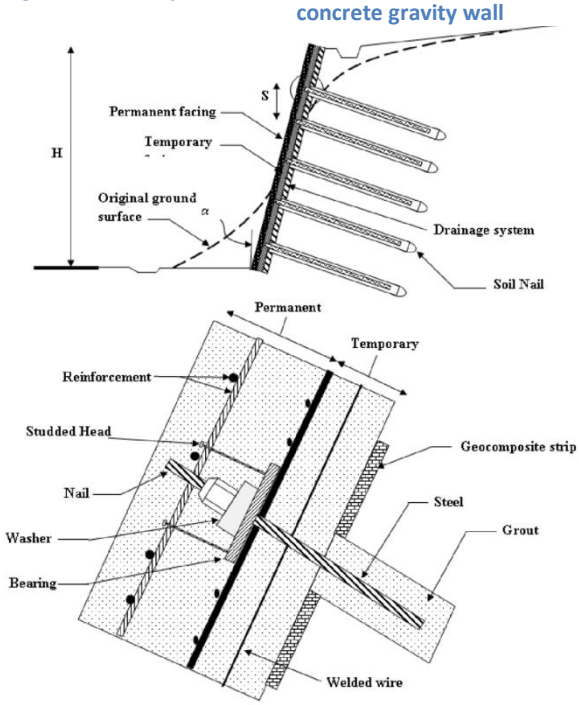

Figure 37: Soil nail wall

Figure 38: Bored pile wall under construction

10.1 Reinforced Earth

Reinforced Earth (or mechanically stabilized earth, MSE) is soil constructed with artificial reinforcing. It can be used for retaining walls, bridge abutments, seawalls, and dikes. It is a composite structure consisting of alternating layers of compacted backfill and soil reinforcement elements, fixed to a wall facing.

The stability of the wall system is derived from the interaction between the backfill and soil reinforcements, involving friction and tension. The wall facing is relatively thin, with the primary function of preventing erosion of the structural backfill. The result is a coherent gravity structure that is flexible and can carry a variety of heavy loads.

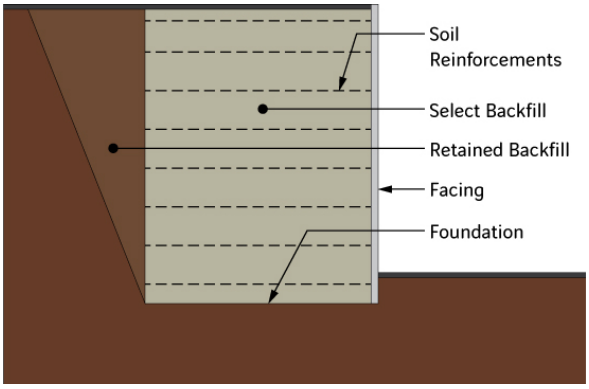

Figure 39: Reinforced earth wall components

Figure 40: Example wall reinforcement

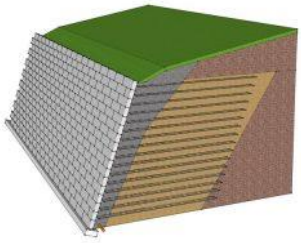

Figure 41: Concrete block reinforced earth retaining wall

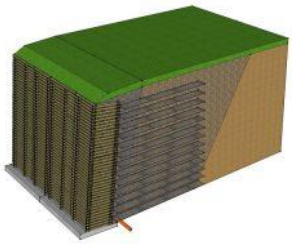

Figure 42: Criblock reinforced earth retaining wall

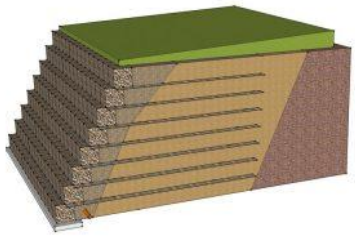

Figure 43: Gabion basket reinforced earth retaining wall

Figure 44: Reinforced earth - keystone wall

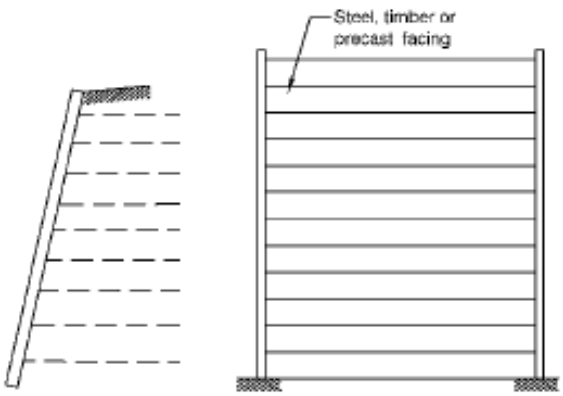

Figure 45: Reinforced earth facing panels

10.2 Revetment Wall

Revetment walls are built against a steep slope to prevent erosion and to stabilise the slope but not to retain the slope i.e. they are not retaining walls in accordance with AS4678.

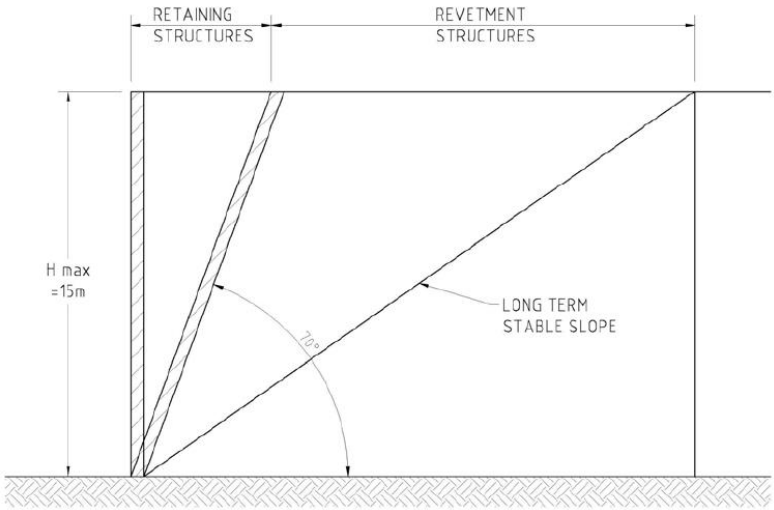

Figure 46: Retaining and Revetment Structures (AS4678-2002)

An example of a revetment wall is the Millswood Subway on Goodwood Road. This wall comprises a lightly reinforced lining placed against a steep cut soil slope and has been effective for over 100 years. This is due to the inherent strength of the unsaturated clay soils, and being protected from the weather and therefore being kept relatively dry.

Figure 47: Revetment wall

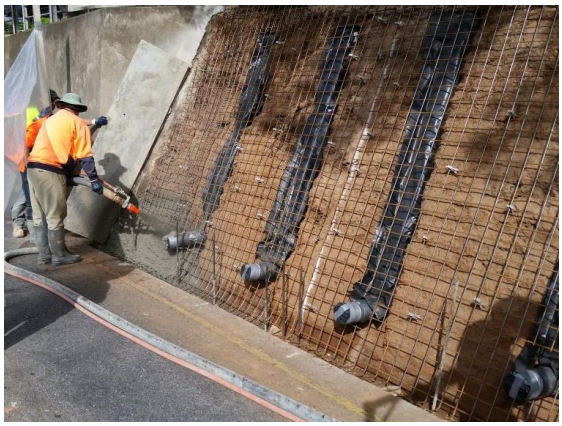

Figure 48: Revetment wall under repair

Figure 49: Revetment wall under repair

11. Noise and Visual Screen Walls

Noise attenuation and visual screen walls are normally located along major roads where there are residential or light commercial developments at the right of way boundary. They are commonly made from a range of materials including timber (plywood), concrete, steel, aluminium, acrylic and polycarbonate materials.

Visual screen walls are similar to noise attenuation walls but are normally used to shield unattractive commercial or industrial development along important roads or shared use pedestrians routes.

These walls can be either attached to another structure (such as the parapet barrier of a bridge) or built as a standalone structure.

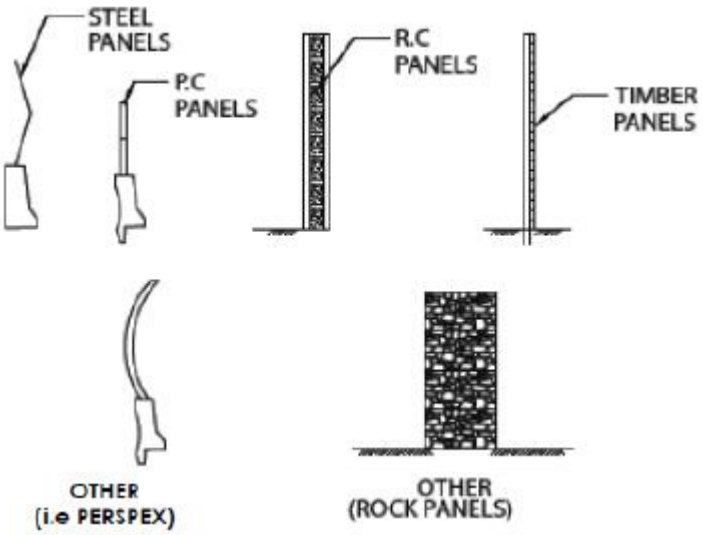

Figure 50: Noise wall facing panels

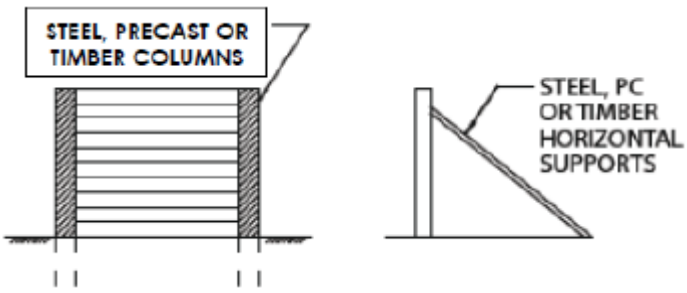

Figure 51: Column / horizontal support

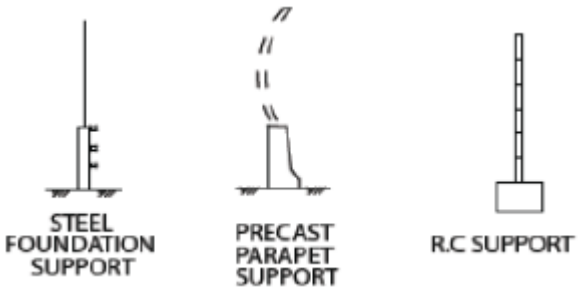

Figure 52: Foundation / support

Figure 53: Hold down baseplate & connections and mortar pad

12. Architectural Features (Urban Art)

These decorative structures are sometimes attached to bridges or other structures but they may be built as structures in their own right. Construction and materials used are similar to noise and visual screen walls.

Figure 54: Glen Osmond Petrified Forest

Figure 55: Lighting features, South Road Superway

Figure 56: Glen Osmond Fountain

Figure 57: Snake Wall, Northern Expressway

Figure 58: "Reeds", North-South Motorway (T2T)

Figure 59: Fins on services bridge, North-South Motorway (T2T)

13. Ferry Ramps

13.1 Ramp Slab

These are reinforced concrete slabs supported on appropriate footing system. They are inclined to allow vehicles to access the ferry from the top of the embankment. The ferries have a run-on ramp that allows vehicle travel from the ferry deck to the ramp surface. The ferries have docking clamps to enable stable mooring when parked.

Figure 60: Ferry ramp slab

13.2 Ramp Shoulder

These often have reinforced concrete facing slabs supported on the natural embankments that exist at the sides of the vehicle ramp slab.

Figure 61: Ferry ramp shoulder

13.3 Deadman – for Ferry Landings

These large blocks are located near the top of ferry ramps.

These differ slightly in detail, but always provide end anchorage for the haul cables.

There are always four at each ferry site.

Figure 62: Deadman

Inspection of Ferry Ramps is devoted to the condition of the ramp slab, the shoulders, the deadmen and the joints for both the “town side” and “far side” of the river. Steel run-on ramps are not inspected as part of the structural inspection of the ramp.

14. Busway Track

These are elevated concrete tracks built on concrete pylons and sleepers and used specifically for carrying O'Bahn guided buses.

Inspection is centred on the structural condition of the concrete; routine road maintenance "loop" (Level 1) inspections consider issues such as vegetation growth and graffiti.

Figure 63: O'Bahn Busway track

Major components comprise the busway track and entry/exit ramps, sleepers and piles as well as steel guide rails and sump busters (car traps).

Figure 64: Busway track, sleepers and piles

Figure 65: Entry ramp with guide rail

Figure 66: Sump buster

15. Cattle Grids

These are a transverse grid of parallel metal bars over a ditch across a road, which prevents passage of livestock and other animals. They are generally located on remote rural roads.

The ditch is generally constructed with concrete sides and concrete wingwalls at the end, with a gate at each end with connection to boundary fences.

Figure 67: Cattle grid

Figure 68: Cattle grid underside

Figure 69: Cattle grid side fence

16. Tunnels

At present these are the Heysen Tunnels and the O'Bahn Busway Tunnel.

Inspection is primarily devoted to the condition of the structural elements of the tunnel. This includes the condition of the concrete portals, tunnel lining and fixtures, and jet fan mountings.

Electrical, electronic and electromechanical assets that are installed in the tunnel are subject to separate inspections that are the responsibility of other areas of the Road and Marine Assets Section of DPTI.

Figure 70: Heysen Tunnels entrance

Figure 71: Heysen Tunnel interior showing jet fans

Figure 72: O'Bahn Tunnel entrance

DESCRIPTION OF BRIDGE ELEMENTS

1. Bridge Approach Barriers

These are intended to prevent errant vehicle from travelling over the adjacent verges into the areas below the roadway level. Vehicles arriving at speed into watercourses, roads or railways below usually have disastrous outcomes.

Figure 73: Approach barrier

Figure 74: Steel guardfence

Figure 75: Precast or cast in-situ parapet on ground

Figure 76: Precast or cast in-situ parapet on retaining wall

1.1 Approach Barrier End Crash Cushion

Concrete approach barriers are inherently massive by nature, and as part of the termination detail, the exposed ends of these barriers are provided with a crash cushion. These are composed of energy absorbing collapsible elements that reduce the dynamic forces during a vehicle impact.

Most are constructed with Armco Thrie-beam outer faces, and have cellular internal elements.

Figure 77: Approach barrier end crash cushion

Figure 78: Crash cushion

2. Bridge Traffic Barriers

These are provided to contain errant vehicles within the traffic lane areas of the bridge so as to limit dangerous or lethal outcomes.

Barriers along the outside edge of bridge decks are intended to prevent vehicles toppling over the edge into watercourses or onto other trafficked areas below.

Figure 79: Traffic barriers

Barriers along the faces of kerbs are intended to prevent vehicles endangering pedestrian traffic in addition to preventing vehicles toppling over the edge of the bridge. Where these are provided, there is always an outer pedestrian barrier as shown in this photograph.

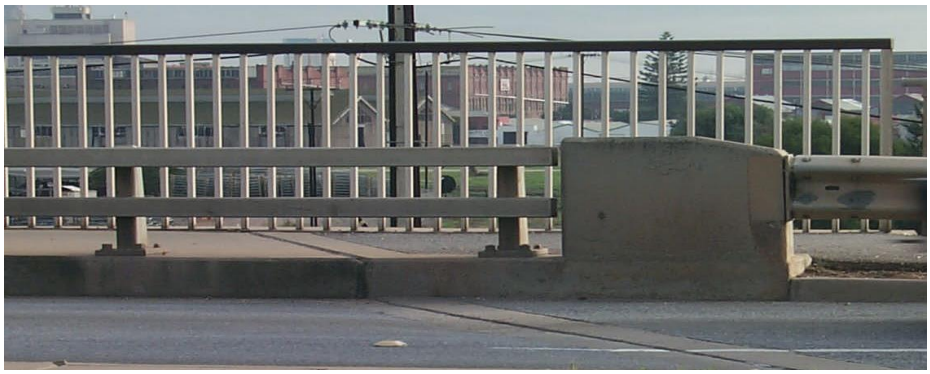

Figure 80: Traffic and Pedestrian barriers

Barriers are assigned an element position (left/right/median) as follows:

Left: on the left hand side of the roadway when facing in the direction of increasing road running distance (RRD)

Right: on the right hand side of the roadway when facing in the direction of increasing road running distance (RRD) (or left hand side when facing in the direction of decreasing RRD)

Median: situated between the left and right lanes or separated carriageways. If the separate carriageways are situated on separate ("twin") bridges (that is, they have different plan numbers) then the barriers shall be considered as left and right for their respective carriageways.

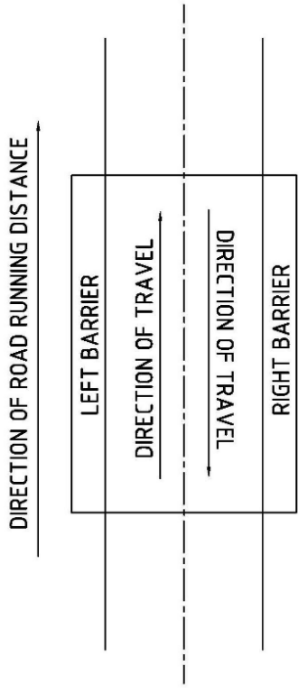

Figure 81: Barrier position - undivided road

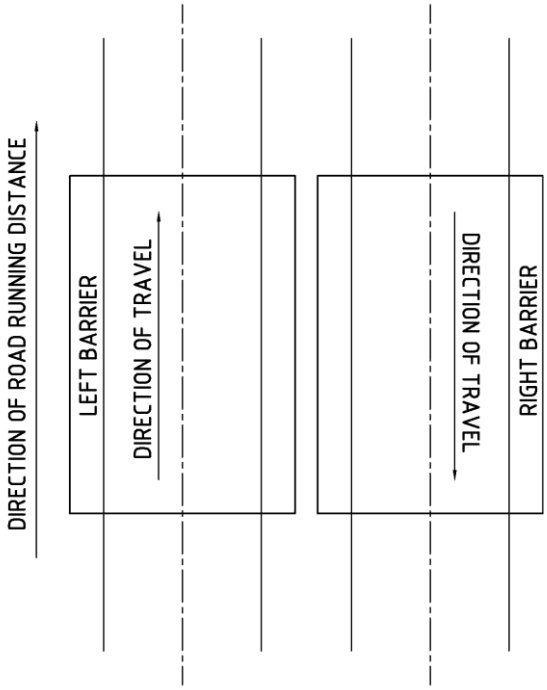

Figure 82: Barrier position - divided carriageway, single bridge, no barrier between carriageways

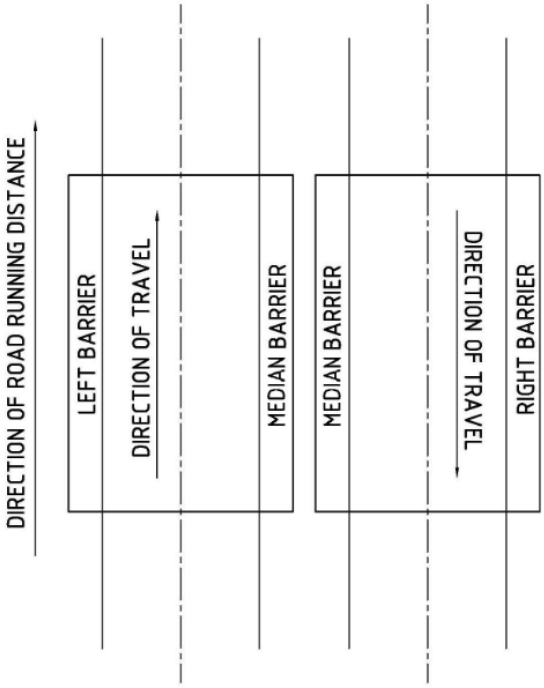

Figure 83: Barrier position - divided carriageway, single bridge

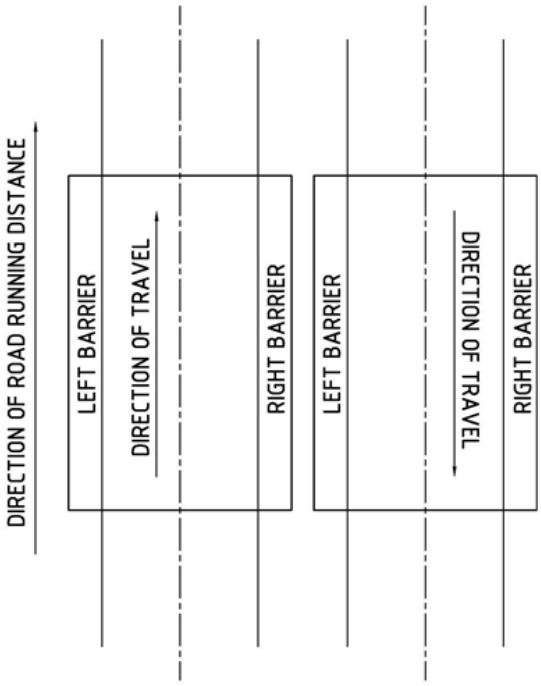

Figure 84: Barrier position - divided carriageway, twin bridges

2.1 No Barriers Installed

Some sites do not have barriers. These are usually culvert and pipe structures on the open highway. Sometimes only sighter posts are provided adjacent to the structure.

Inspectors should be vigilant and report the situation where short length structures have their overall width between outside edges of the headwalls less than the overall width between the road shoulder lines. This presents a potential hazard for vehicles that approach the structure when travelling along the road shoulder. In this instance, a vehicle may fall over the edge of the wingwall into the area at the end of the structure.

The solution to restore road safety is to: -

- Widen the structure at each end, or
- Add approach and structure barriers.

For these repair proposals, the inspector should specify the need for a Safety Audit.

2.2 Steel Traffic Barriers

Figure 85: Steel traffic barrier

Figure 86: Steel traffic barrier

2.2.1 Steel Traffic Barrier with Pedestrian Rail

Figure 87: Steel traffic barrier with pedestrian rail

2.3 W-Beam Barriers

This type of steel barrier may:-

- Be standard as shown:

Figure 88: W-Beam barrier

Figure 89: W-Beam barrier

or

- Have a rectangular hollow section backing rail (RHS backed):

Figure 90: RHS backed W-Beam barrier

2.3.1 W-Beam Barrier with Pedestrian Rail

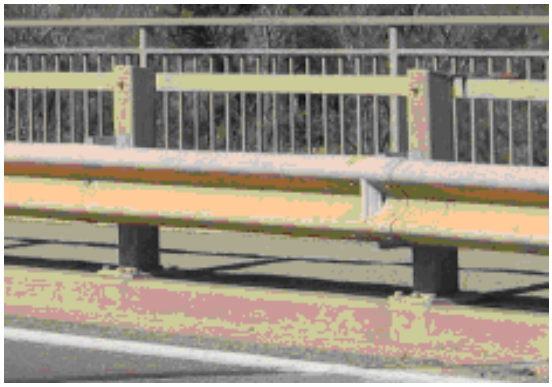

Figure 91: W-Beam barrier with pedestrian rail

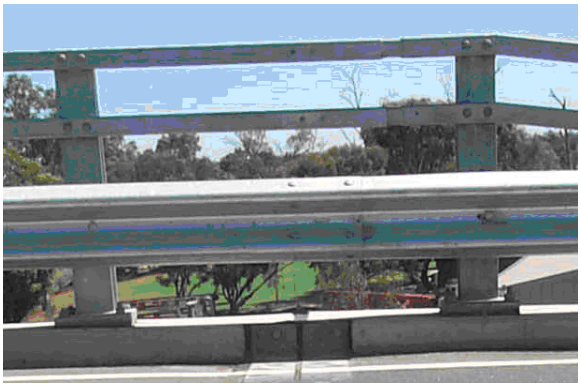

Figure 92: RHS backed W-Beam barrier with pedestrian rail

2.4 Thrie Beam Barriers

Like W-Beam barriers, these can either be standard or RHS-backed:

Figure 93: Thrie beam barrier

Figure 94: RHS backed thrie beam barrier

2.5 Steel Post / Aluminium Rail

Figure 95: Steel post and aluminium rail barrier

Figure 96: Steel post and aluminium rail barrier

2.5.1 Steel Post / Aluminium Rail with Pedestrian Rail

Figure 97: Steel post / aluminium rail with pedestrian rail

2.6 Aluminium Post / Aluminium Rail

Figure 98: Aluminium post and aluminium rail barrier

2.7 Wire Rope Barriers

Figure 99: Wire rope barrier

2.8 Concrete / Steel Pipe

Figure 100: Concrete and steel pipe barrier

2.9 Concrete / Steel Panel

Figure 101: Concrete and steel panel barrier

Figure 102: Concrete and steel panel barrier

2.10 Concrete Wall / Fence

Figure 103: Concrete fence barrier

Figure 104: Concrete fence barrier

Figure 105: Concrete wall barrier

2.11 Concrete Safety Barrier (including New Jersey Profile)

Figure 106: Concrete safety barrier

2.12 Concrete Safety Barrier with Rail (including New Jersey Profile)

Figure 107: Concrete safety barrier (New Jersey profile) with rail

Figure 108: Concrete safety barrier with rail

Figure 109: Concrete safety barrier with rail

2.13 Masonry Barriers

Figure 110: Masonry barrier

2.14 Barrier Endwalls

These are substantial concrete blocks, shaped to the barrier face profiles, and are attached to the edges of abutments.

They are in line with the trafficked face of the bridge barriers and link the bridge barriers and approach barriers.

The approach barriers are connected so as to develop full tensile strength of the W-Beam. Post spacing is usually 500mm close to the endwall (transition zone).

Figure 111: Barrier endwall

3. Pedestrian Barriers / Fences

These are provided at the outside edges of bridge footpath slabs, and are intended to restrain pedestrians from falling into the areas beneath the bridge. Usually details of the construction attempt to prevent or limit the ability of children to climb over or through the barrier panel components.

3.1 Bridges where the Girders act as the Barriers and / or there is a Canopy

These sites will usually be pedestrian bridges.

Figure 112: Canopy

3.2 Barriers that are not part of the Bridge

An example is a footpath or shared path under the bridge.

Figure 113: Pedestrian barrier under bridge

3.3 Steel Barriers

Figure 114: Steel pedestrian barrier

Figure 115: Steel pedestrian barrier

Figure 116: Steel pedestrian barrier

Figure 117: Steel pedestrian barrier

3.4 Wrought Iron Barriers

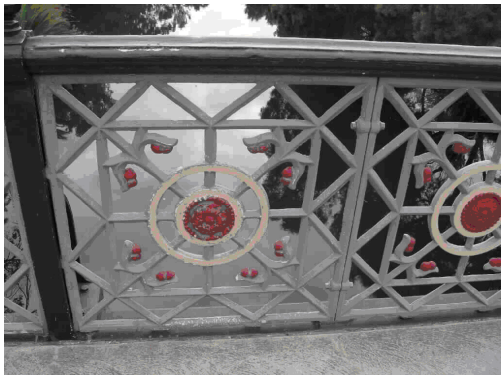

Figure 118: Wrought iron pedestrian barrier

3.4.1 Galvanised Wrought Iron (GWI) Posts and Rails

Figure 119: GWI post and rail barrier

Figure 120: GWI post and rail barrier

3.5 Aluminium Barriers

Figure 121: Aluminium pedestrian barrier (with defect)

3.6 Chain Wire Mesh Barriers

Figure 122: Chain wire mesh barrier

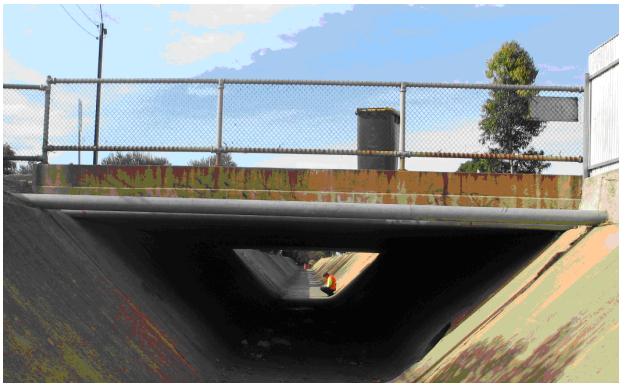

Figure 123: Chain wire mesh barrier

3.7 Timber Barriers

Figure 124: Timber pedestrian barrier

4. Other Barriers and Screens

4.1 Safety Screens

These are intended to restrain pedestrians from falling into the areas beneath the bridge. They may have also been installed as anti-throw screens, with the specific purpose of preventing people from throwing rocks and other debris into the roadway/busway/railway below the bridge.

Figure 125: Safety screen

Figure 126: Anti-throw screen

Figure 127: Anti-throw screen

4.2 Noise Barrier

This is a barrier that has an additional purpose of attenuating traffic noise to the surrounding (usually residential) areas.

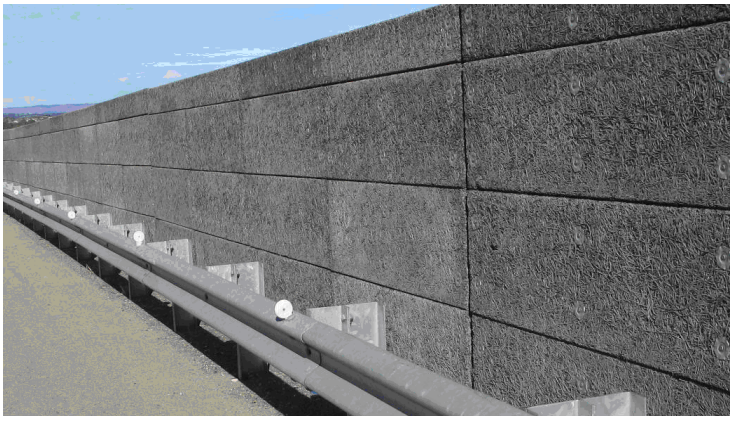

Figure 128: Noise barrier

5. Bridge Kerbs and Footpaths

5.1 Kerbs

Concrete kerbs can be cast-in-situ or precast

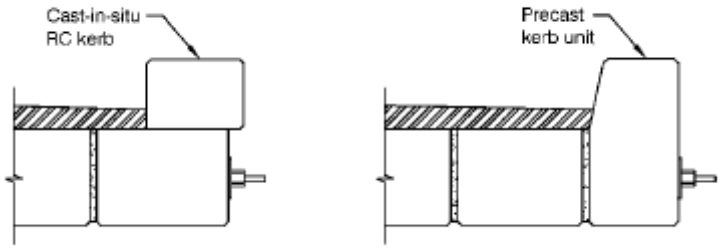

Figure 129: Kerbs

5.2 Footpaths (also called Footways)

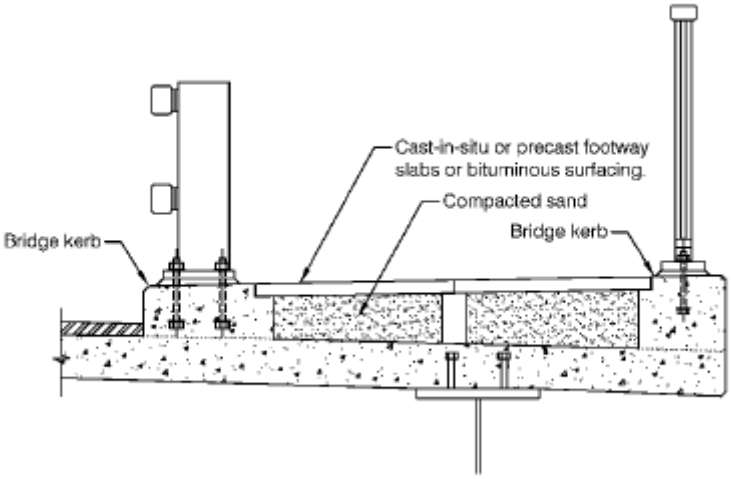

Figure 130: Kerb and footpath

6. Deck Roadway Joints

These elements support wheels of vehicles as they cross the joint and also must accommodate movement of the bridge that occurs at road level. Some joints are intended to be watertight; other joints are intended to allow passage of water.

All joints have to accommodate movement due to end rotation of the girders or slab. These joints are notionally called “Fixed Joints”.

Additionally, where joints are required to accommodate longitudinal movement due to temperature, creep, and shrinkage. These joints are nominally called “Expansion Joints”.

Deck joints have to carry large concentrated forces from wheel loadings, which include significant dynamic load factors.

The repetitive nature of traffic loading makes any shortcomings in design or construction become evident as a partial or generalised failure of the joint.

Longitudinal Joints in Deck Slabs (Construction Joints)

There are many older bridges where construction was made in 2 stages to keep the roadway open. This necessitated a longitudinal joint in the deck slab somewhere near the road centreline. The longitudinal joint in the slab exists whether the bridge construction is composed of girders and deck slab, or only a reinforced concrete slab that spans between supports.

Some of these longitudinal joints have developed leakage over time, and allow water to percolate to the underside areas.

Where steel girders exist in the construction (usually one on each side, close to the longitudinal joint) leakage can cause severe corrosion to develop in the girders

Often these joints allow water to percolate through because shrinkage forces have opened them slightly, and also traffic causes flexing at that location as well.

Attempts to repair the leakage from beneath using mortar are not usually successful due to the foregoing, and are impossible to access where closely spaced paired girders are present.

The remedy is to treat the cause rather than the symptom. In this case it is recommended that the deck joint be sealed at the top of the slab on the roadway.

Where double steel girders exist that have unacceptable quantities of corrosion, they should be treated with appropriate corrosion protection.

6.1 Bonded Sealant Joint

This joint has concrete nosings at road level that are waterproofed using an elastomeric bonded sealant.

This type of joint has previously been referred to as "Expansion joint not covered by asphaltic concrete".

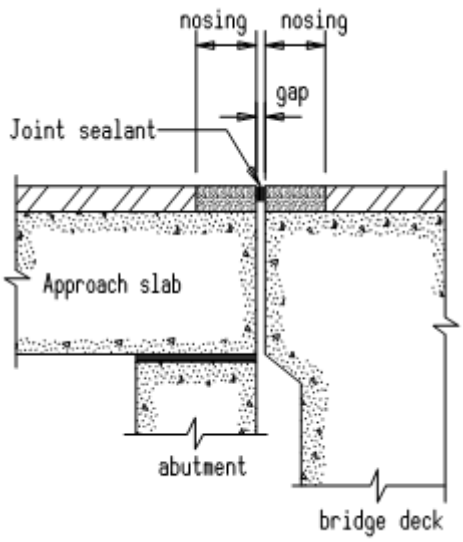

Figure 131: Expansion joint not covered by asphaltic concrete

6.2 Sliding Plate Joint

Joint is covered with a plate bridging the gap. Cover plate is attached at one side only.

Experience has shown that this choice of joint in combination with elastomeric bearings has often leads to plate fixing failures. This is due to the fact that elastomeric bearings undergo vertical creep deflections due to dead load. The result is that the plate suffers failure when loaded as a cantilever.

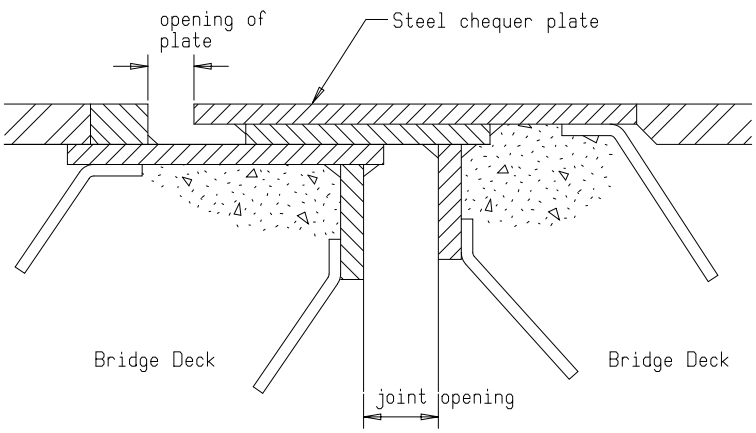

Figure 132: Sliding plate joint

6.3 Open Gap Joint

Joint is usually armoured along edges, and does not have a sealing element.

Water and grit are collected below deck level. The presence of the water from the deck requires a best choice for girders and bearings.

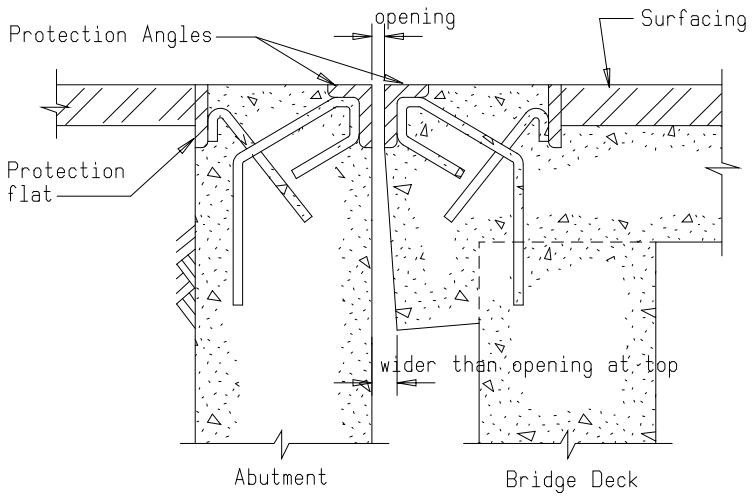

Figure 133: Open gap joint

6.4 Compression Seal Joint

A cellular sealing element of rubber or neoprene is installed so that residual compression prevails between end faces of the joint.

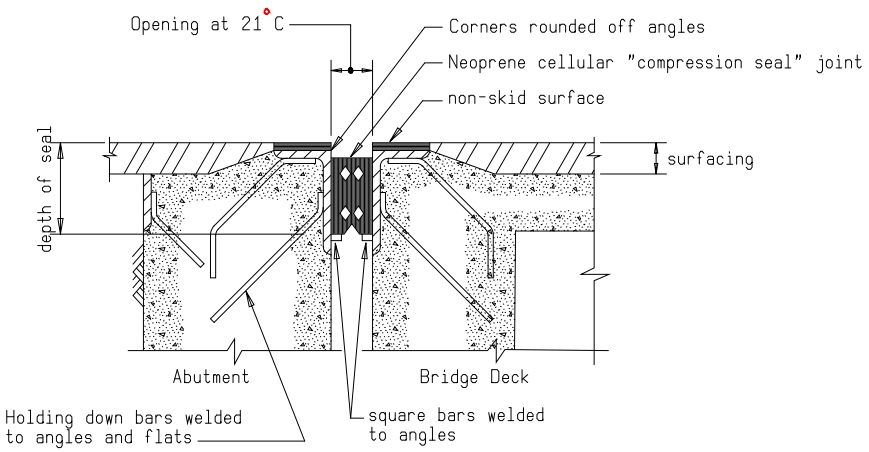

Figure 134: Compression seal joint

6.5 Assembly Joint Seal

A solid or cellular sealing gland of rubber or neoprene is retained between steel or aluminium side members attached to the deck and/or abutment concrete.

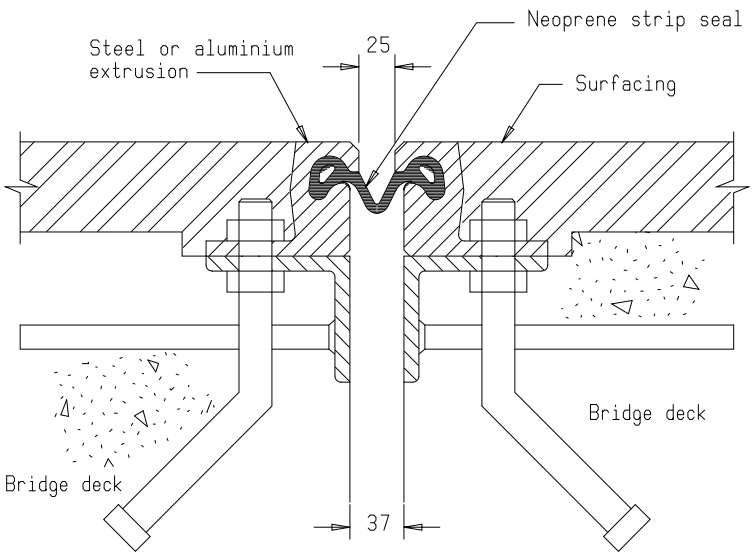

Figure 135: Assembly joint seal / Strip seal joint / Elastomeric gland joint

6.6 Joint Covered by Asphaltic Concrete i.e. Asphaltic Plug Joint

This joint is usually provided as a repair for existing joints that are not covered by asphaltic concrete.

The bituminous concrete plug should have an elastomeric binder that can accommodate high strain.

The plug usually has a reinforcing grid installed within - proprietary systems are available.

Figure 136: Asphaltic plug joint

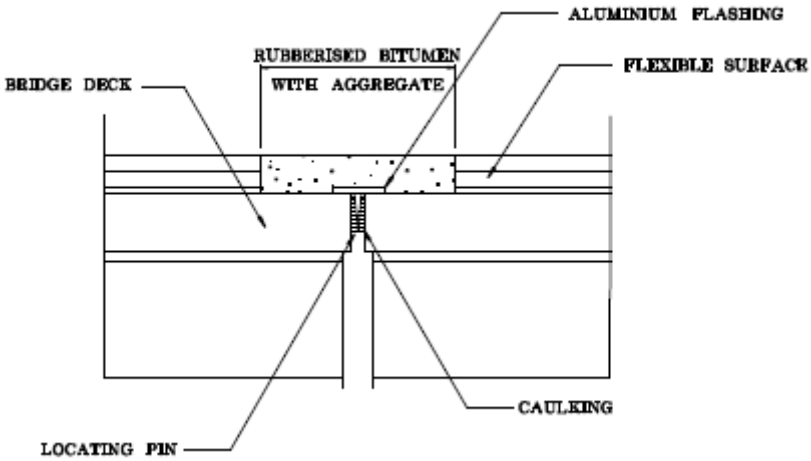

Figure 137: Pourable joint / Asphaltic plug joint

6.7 Finger Plate Joint

These joints cater for larger movements by having metal intermeshing fingers from both sides of joint gap that carry wheel loads.

Figure 138: Finger joint

Figure 139: Finger plate joint

6.8 Bitumen Joint over end of Abutment

For moderate span bridges this type of abutment end treatment is sometimes provided.

The bitumen will develop a crack line coincident with the end of the deck due to end rotation and lateral movement, and is usually acceptable.

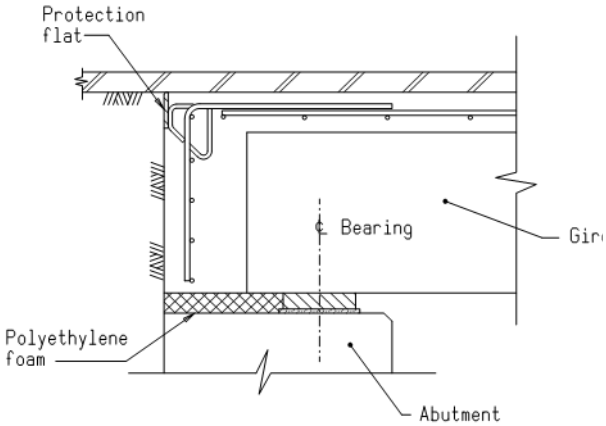

Figure 140: Bitumen joint over end of abutment

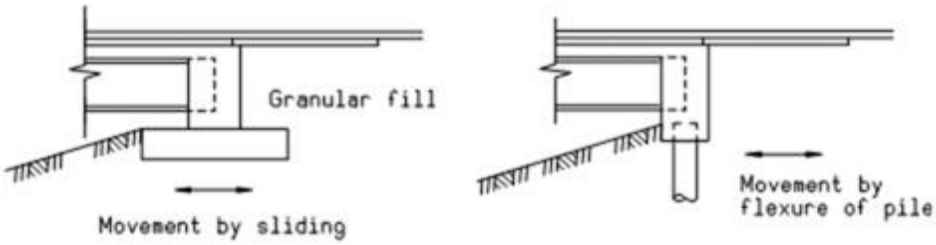

Figure 141: End movement of joint

7. Bridge Decks

This is the structural element that transfers the vehicle wheel loads into the superstructure.

Most bridges have concrete decks in the form of a reinforced slab. This may span between lines of bearings of the substructure, or span between lines of girders. Other types of deck may include a reinforced or prestressed concrete slab. A few bridges have timber decks – usually very small span, and of course, Bailey Bridges have timber.

Some slabs are cast on top of precast concrete formwork slabs. These can be reinforced or prestressed.

Almost all decks have a bituminous overlay provided as a running surface.

7.1 Spanning Slab

These reinforced concrete slabs have their main reinforcement placed parallel to traffic direction.

Figure 142: Reinforced concrete slab

7.2 Timber Deck

Rarely used for new construction now – but a small number of existing footbridges and the Birkenhead Bridge bascule spans have timber decks.

Figure 143: Deck on steel girder

Figure 144: Deck on masonry abutment

7.3 Slab on Girders

These reinforced concrete slabs have their main reinforcement placed perpendicular to traffic direction. The slab may be compositely connected to the girders, or built as a non-composite system.

Figure 145: Reinforced concrete slab on girder

7.4 Steel Plate Decks

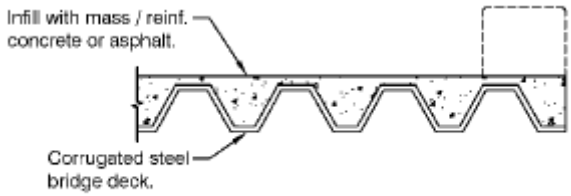

Figure 146: Longitudinal steel decking

8. Bearings

These components transfer dead and live load forces from the superstructure to the substructure.

8.1 Elastomeric Bearings

These bearings can be single layer plain pads, or multi-layer construction that contains steel shims. The whole is bonded into a monolithic unit with specified cover thickness to the steel.

These bearings can have a rectangular or circular plan form.

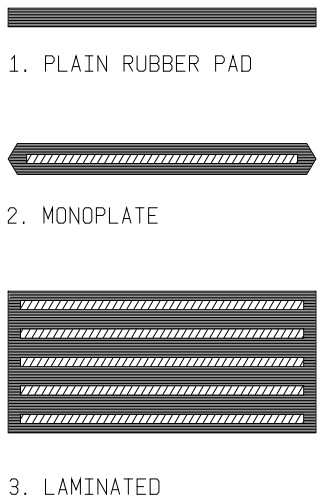

Figure 147: Elastomeric bearings

8.2 Sheet Lead Bearings

Rolled sections supported by a steel bearing plate usually have sheet lead bearing in between. Sheet lead can be installed in either fixed or expansion bearings.

These are no longer specified for new construction work.

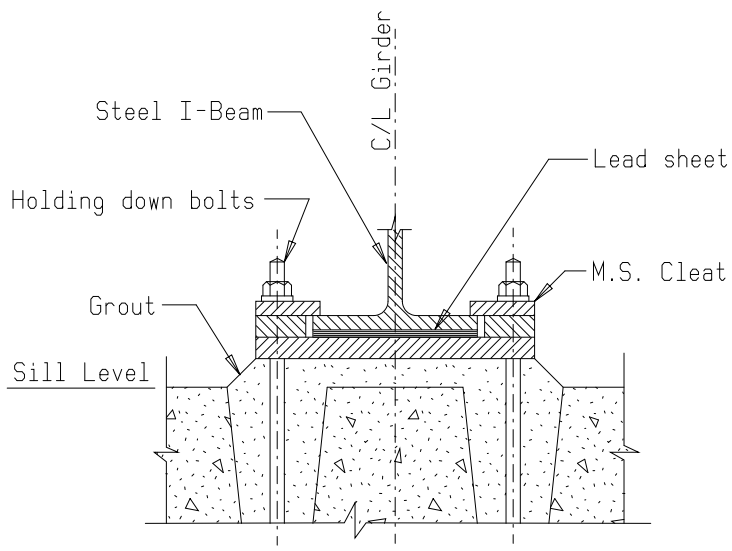

Figure 148: Sheet lead bearings

8.3 Replacement Bearing for Sheet Lead

Where sheet lead bearings have failed and caused concrete sill cracking, this type of bearing has been used as a replacement for sheet lead since 1993.

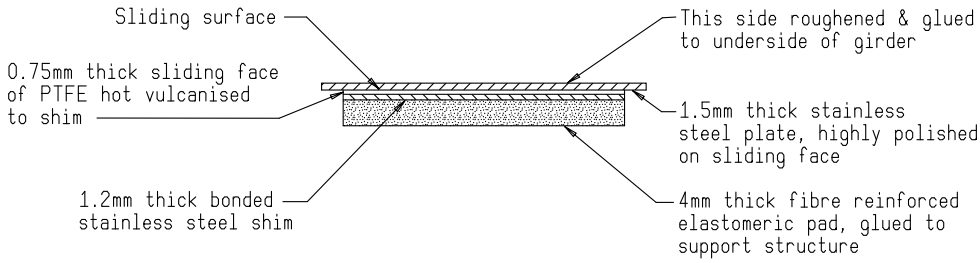

Figure 149: Replacement bearing for sheet lead

8.4 Steel Roller Bearing

High strength steel rollers are provided between upper and lower plates, giving rotational and movement capability.

The rollers are usually guided by ribs within the roller width, or indexed to plates using gear teeth or other devices at the ends.

Sometimes the whole system is enclosed with covers to exclude dirt and water.

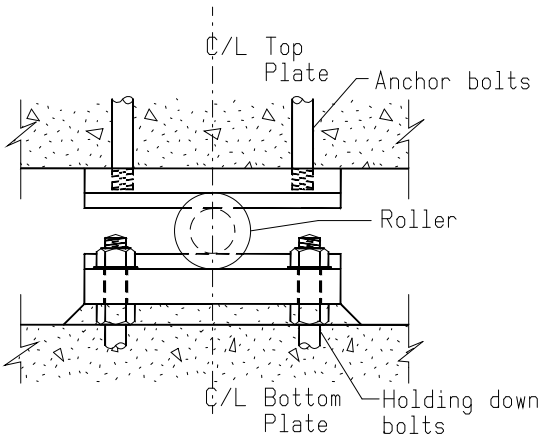

Figure 150: Steel roller bearing

8.5 Steel Rocker Bearing

High strength steel rockers with curved surface(s) are provided, permitting rotation about one axis. These are for fixed bearings.

The addition of sliding interfaces enables them to accommodate horizontal movement, and become expansion bearings.

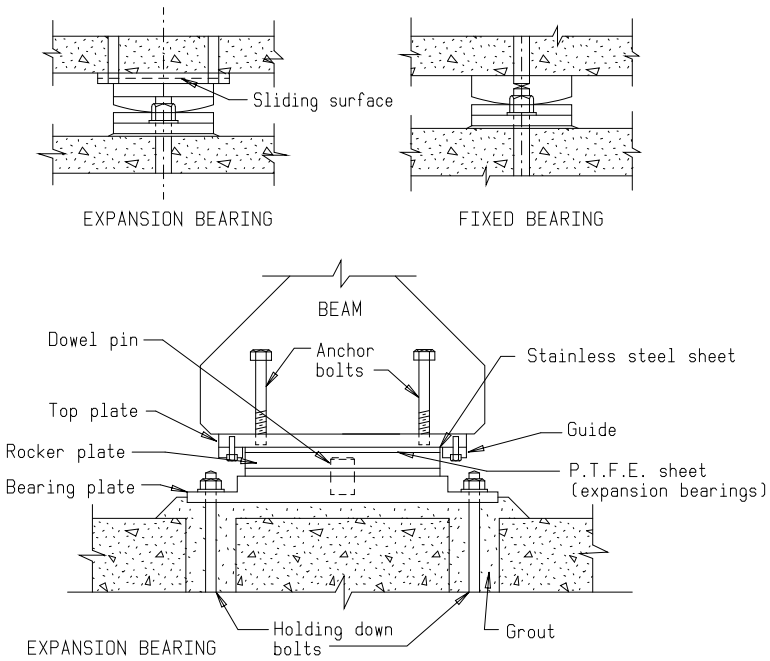

Figure 151: Steel rocker bearing

8.6 Spherical Bearing

Steel or aluminium castings with a spherically curved surface permitting rotation in any direction.

These are for fixed bearings.

The addition of sliding interfaces enables them to accommodate horizontal movement, and become expansion bearings.

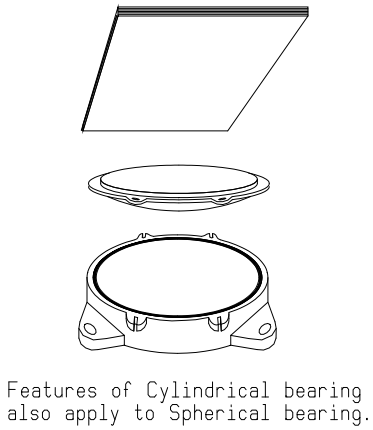

Figure 152: Spherical bearing

8.7 Cylindrical Bearing

These have steel or aluminium castings with a cylindrically curved surface permitting rotation about one axis only.

These are for fixed bearings.

The addition of sliding interfaces enables them to accommodate horizontal movement, and become expansion bearings.

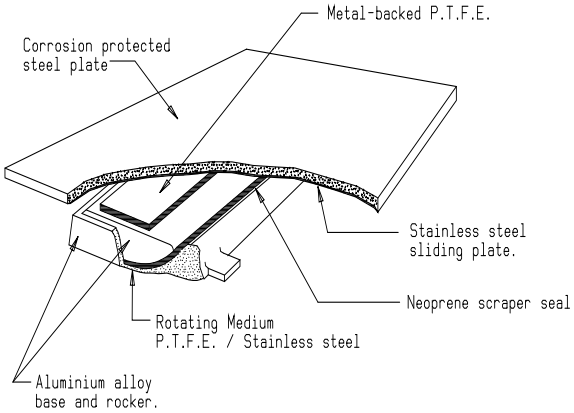

Figure 153: Cylindrical bearing

8.8 Pot Bearing

These bearings consist of a piston and cylinder containing a plain elastomeric pad. The pad is usually provided with a circumferential brass ring to prevent extrusion of the elastomer. This gives the bearing rotational capability in all directions. These are for fixed bearings.

The addition of sliding interfaces enables them to accommodate horizontal movement, and become expansion bearings.

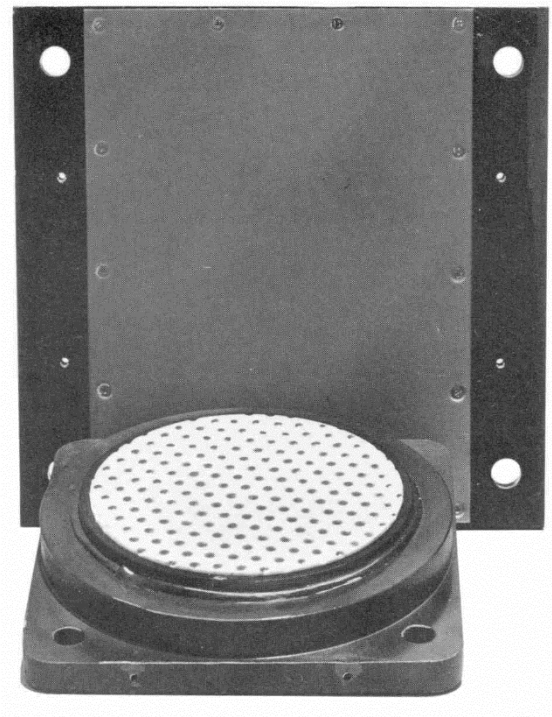

Figure 154: Pot bearing

8.8.1 Fixed Pot Bearing

These consist of an elastomeric/rubber disc seated on a steel piston and covered with a steel cylinder

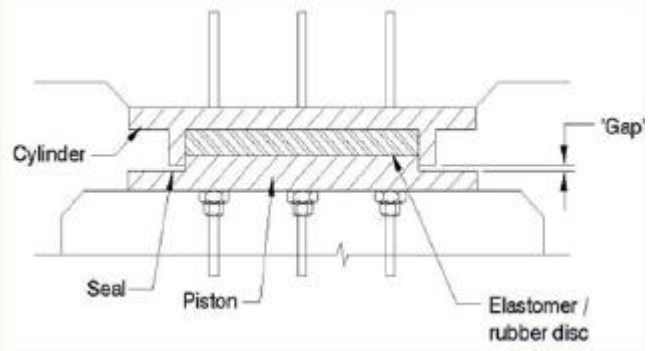

Figure 155: Fixed pot bearing

8.8.2 Sliding Pot Bearing

The base unit is similar in nature to a fixed bearing, consisting of an elastomer/rubber disc seated on a steel piston and covered with a steel cylinder; however, a thin PTFE sheet is adhered to the top of the cylinder. The upper portion of the bearing consists of a steel plate with a stainless steel sliding surface that is seated directly onto the PTFE sheet. In some cases, side stops are also installed to ensure that the bearing is only permitted to slide in certain directions.

Figure 156: Sliding pot bearing

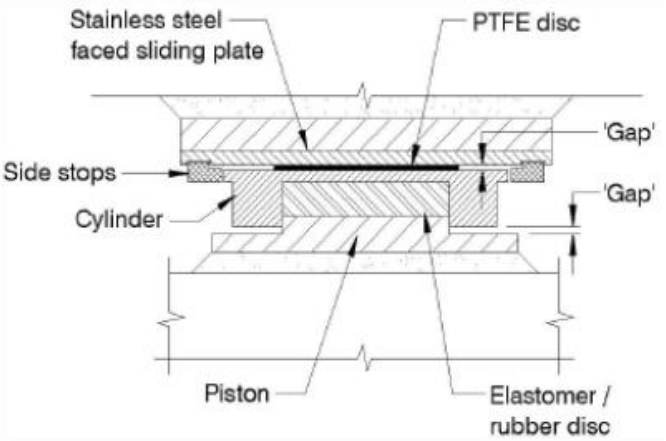

8.9 Steel Knuckle Bearing (Leaf Bearing)

These always function as fixed bearings. Pairs of steel castings are connected together with a large diameter pin. This gives rotational capability about one axis only.

These bearings are usually on large structures of older vintage.

Figure 157: Steel knuckle (leaf) bearing

9. Girders

These are critical structural members that support the bridge deck, and span between abutments and/or piers.

Girders may have a constant or variable depth, and are installed with discrete spacings between them that may be variable as well. They may have protective coating systems applied (steel girders always, concrete very occasionally), and the integrity of that coat affects the life of the steel girders.

Steel girders (rolled sections or fabricated plate) may be compositely connected to the deck slab, or built as a non-composite system.

Concrete girders (reinforced or prestressed) are always compositely connected with the deck slab

There are very few timber girder bridges in this state, and those that are still in service are mostly confined to short spans of only a metre or two in length.

Girders that carry spans of overpass structures are vulnerable to high vehicle impact damage. History has shown that severe damage can occur, and that far-reaching and immediate actions may be needed following a requested inspection of a bridge in this circumstance.

9.1 Reinforced Concrete Girders

Usually integrally cast with the deck slab.

Figure 158: Cast-in-situ reinforced concrete beam & slab

Figure 159: Reinforced concrete girder

9.1.1 Reinforced Concrete Arch

Figure 160: Concrete arch bridge

Figure 161: Concrete arches

9.2 Prestressed Concrete Girders

These are constructed as: -

- Box girders – always post-tensioned
- Slabs – solid or voided, and are post-tensioned
- T-beams - post-tensioned
- “I” beams - pre-tensioned or post-tensioned
- Plank units - pre-tensioned

Figure 162: Multi-cell box girder

Figure 163: Single-cell box girder

Figure 164: Voided slab

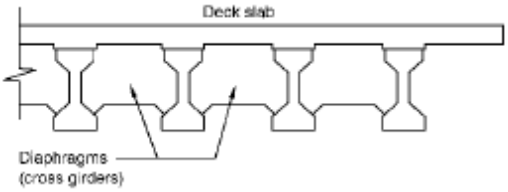

Figure 165: "I" beam with diaphragms

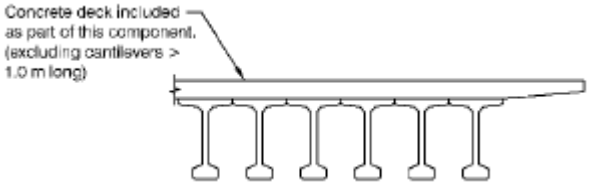

Figure 166: Bulb T-beam & reinforced concrete slab

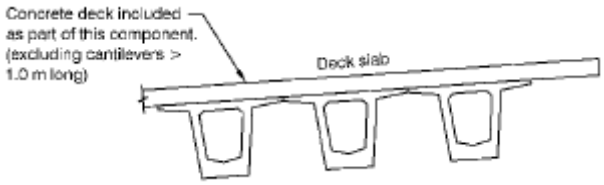

Figure 167: Super T-beam & reinforced concrete slab

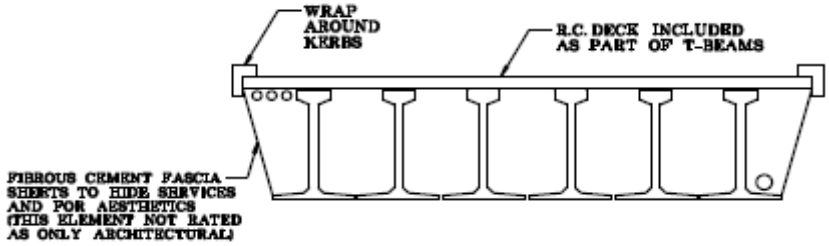

Figure 168: Inverted T-beams

Figure 169: Prestressed I beam girder

Figure 170: Post tensioned segmental box girder

Figure 171: Precast pre-tensioned plank units

9.3 Steel Girders

These are constructed as: -

- Box girders
- Standard steel beams ("I" beams)
- Welded steel beams
- Riveted steel plates
- Trusses
- Arches

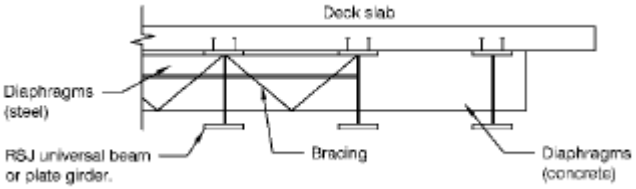

Figure 172: Steel beam & reinforced concrete slab

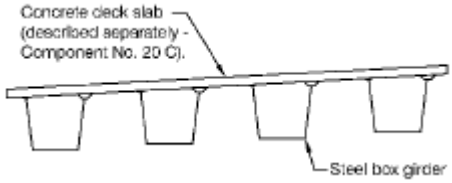

Figure 173: Steel box girder with composite deck

Figure 174: Steel box girders

Figure 175: Steel beams

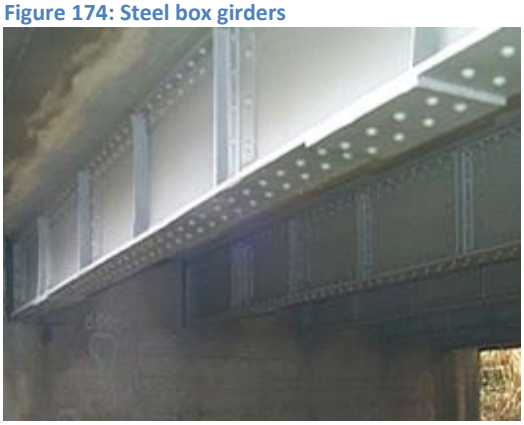

Figure 176: Riveted steel plates

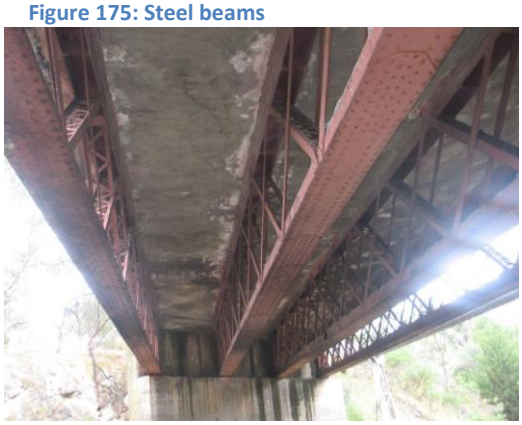

Figure 177: Truss girders

Figure 178: Steel arch bridge

Figure 179: Steel arches

9.4 Load Bearing Diaphragms

Load bearing diaphragms are integral with the superstructure beams and are used as a means of joining girders to provide continuity over the pier supports, and the diaphragm is used to support the beams on the pier or columns below.

Diaphragms may be cast in-situ concrete used with precast concrete beams, or steel used with steel girders or boxes.

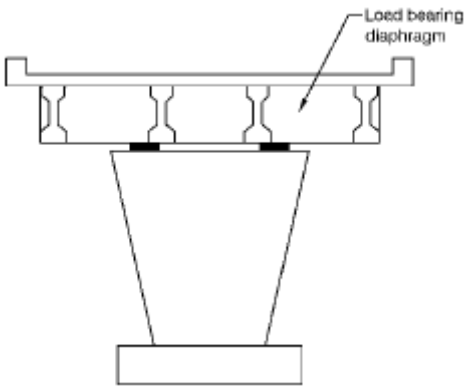

Figure 180: Load bearing diaphragm

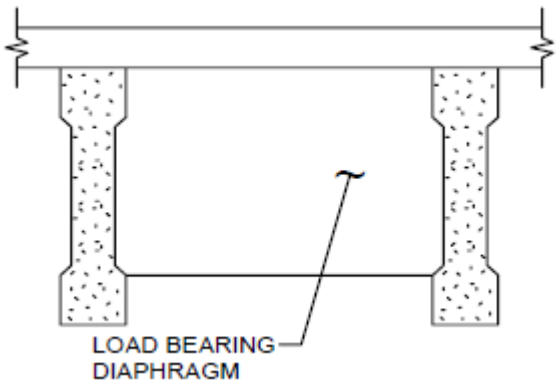

Figure 181: Load bearing diaphragm

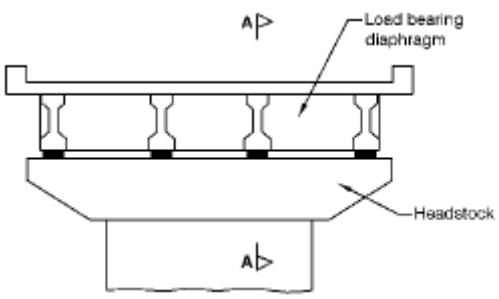

Figure 182: Load bearing diaphragm

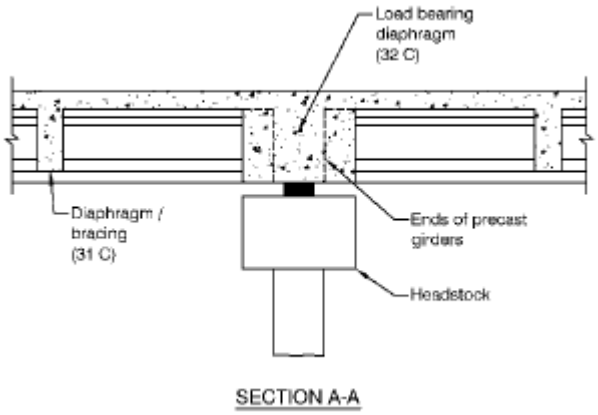

Figure 183: Load bearing diaphragm - cross section

9.5 Diaphragm / Bracing

This includes stiffening devices for the ends of the deck and between girders and beams, and includes wind bracing of large girder bridges.

Diaphragms may be cast in-situ reinforced concrete deep diaphragms between concrete "I" and "T" beams, or be simple steel rods, straps or small angles crossing between steel girders, or be heavy channel connectors between steel beam webs. Wind bracing may be by steel angles or steel rods.

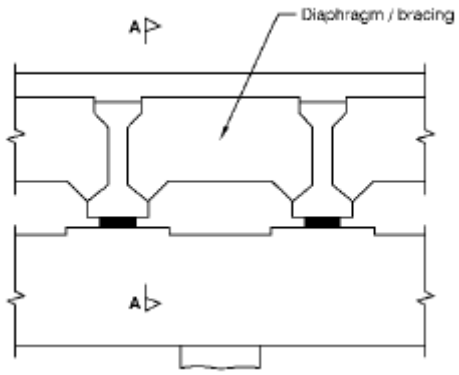

Figure 184: Diaphragm/bracing

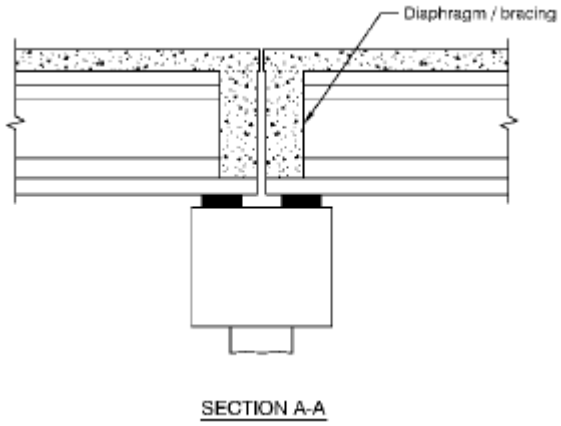

Figure 185: Diaphragm/bracing - cross section

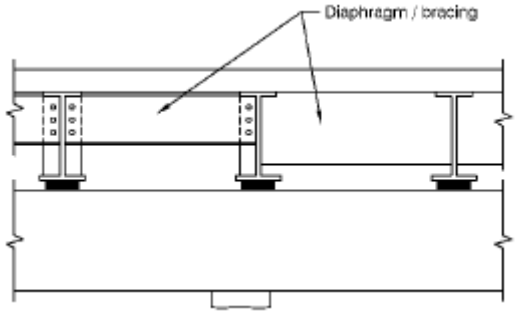

Figure 186: Diaphragm/bracing

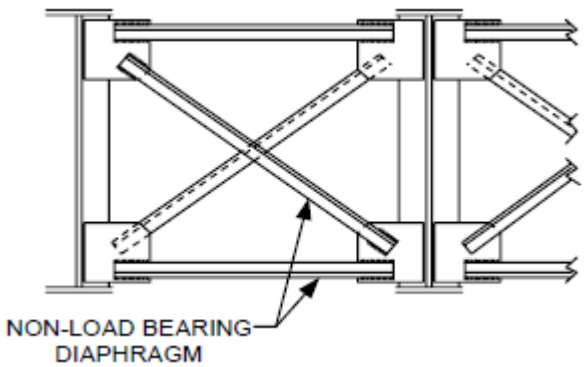

Figure 187: Non-load bearing diaphragm

10. Abutments (Substructure)

The substructure elements support all dead load, live loads and wind loading from the superstructure via the bearings. That load is then borne by the foundations of the substructure. The foundations, which are composed of spread footings, piles or reinforced earth finally transfer the total loading into the ground.

10.1 Cantilever Abutment

Composed of a reinforced concrete footing, main wall and a backwall behind the girders. The footing may be supported on piles, or on the natural sub-grade (spread footing).

Weep holes are normally provided in the wall just above natural surface level in front of wall.

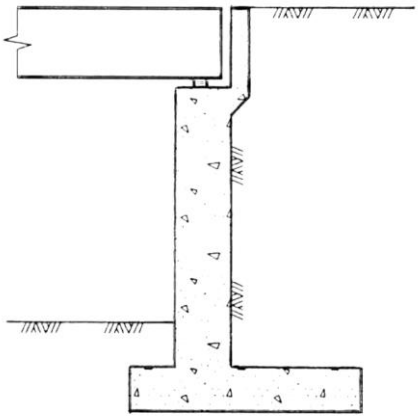

Figure 188: Cantilever abutment

10.2 Reinforced Earth Abutment

A reinforced concrete sill and backwall is constructed on top of a soil block. The sill usually has spread footings, but occasionally supported on piles. The wall is composed of facing panels (usually reinforced concrete) that are laterally restrained by steel strips embedded horizontally into the soil block.

The facing panels bear on a footing below natural surface level.

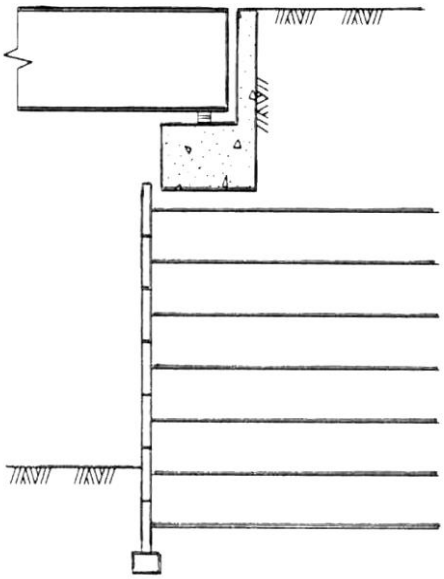

Figure 189: Reinforced earth abutment

10.3 Piled Sill Abutment

Piles support a reinforced concrete cap, bearing sill and backwall. The piles may be constructed from concrete or steel.

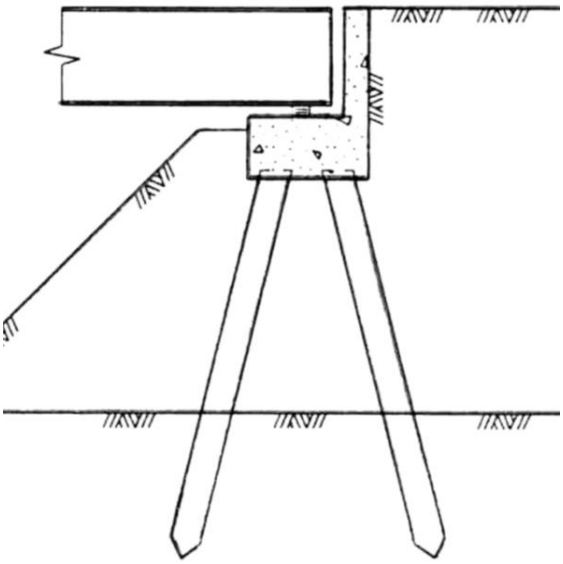

Figure 190: Piled sill abutment

10.4 Sheet Piled Wall Abutment

Steel sheet piles support a reinforced concrete cap and backwall. The piled wall is usually provided with horizontal tie rods (75 to 100mm diameter is not unusual) at regular spacings. These are anchored within the fill using "deadman" anchor blocks.

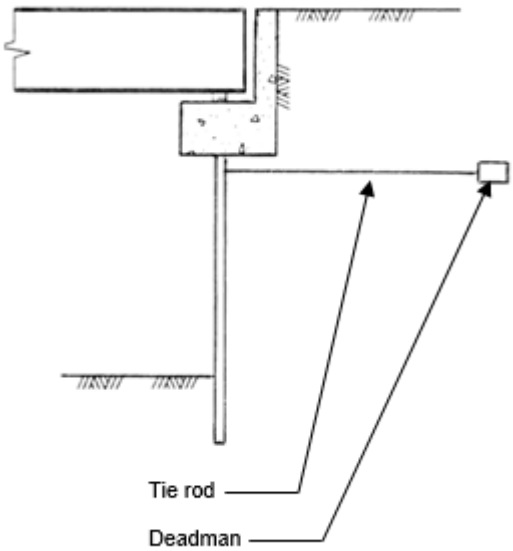

Figure 191: Sheet piled wall abutment

10.5 Masonry Abutment

The abutment wall is composed of masonry blocks joined together using lime mortar. The wall is a gravity structure

Figure 192: Masonry abutment

10.6 Timber Abutment

These are usually composed of piles, walings and sheets to retain the earth fill and sustain permanent and live loadings.

At times, tie rods are provided in the upper areas.

Figure 193: Timber abutment

11. Abutment Batter Protection

Protection for abutment batters is often provided by either precast concrete panels, cast in-situ concrete or stone or rocks (grouted or ungrouted, with reinforcement mesh or without), stone filled cages, paving bricks or other means.

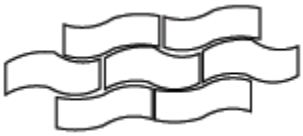

Figure 194: Precast concrete beaching

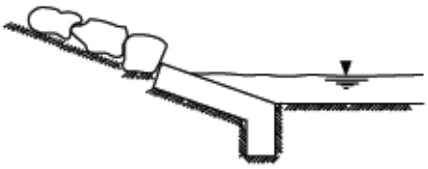

Figure 195: RC batter protection

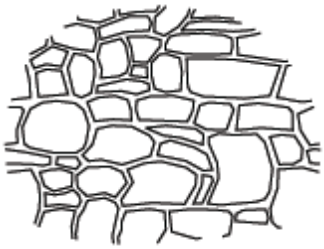

Figure 196: Stone/rock beaching or grout beaching

12. Piers (Substructure)

The substructure elements support all dead load, live loads and wind loading from the superstructure via the bearings. That load is then borne by the foundations of the substructure. The foundations, which are composed of spread footings, piles or reinforced earth finally transfer the total loading into the ground.

12.1 Single Column Pier

Reinforced concrete footing, wall and crosshead – usually a double cantilever. The footings are usually supported on piles, although rock may permit a spread footing. Sometimes dwarf walls are provided between girders for deck support.

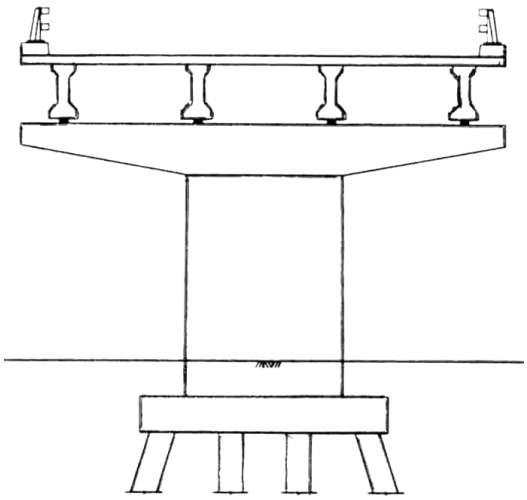

Figure 197: Single column pier

12.2 Twin Column Pier

Reinforced concrete footing, columns and crosshead. The footings are often supported on piles, although rock may permit a spread footing. Sometimes dwarf walls are provided between girders for deck support.

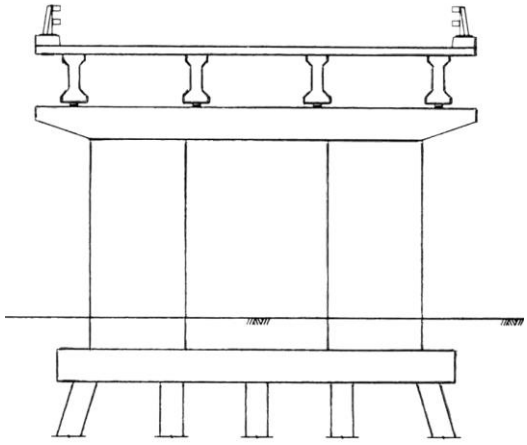

Figure 198: Twin Column Pier

12.3 Solid Wall Pier

Reinforced concrete footing, columns and crosshead. The footing may be supported on piles, or be a spread footing type. Sometimes dwarf walls are provided for deck support.

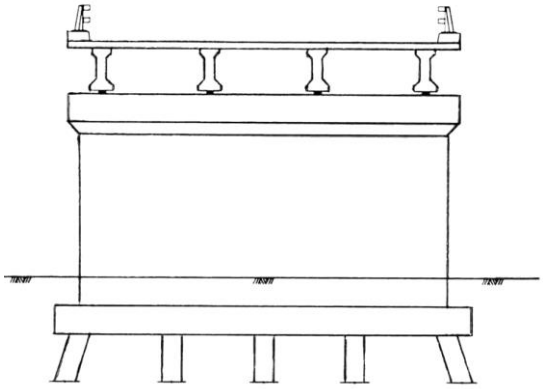

Figure 199: Solid wall pier

12.4 Trestle Pier

Reinforced concrete crosshead supported by a single row of piles or multiple small diameter columns (on a footing). The piles may be constructed from concrete, steel or timber. Sometimes dwarf walls are provided for deck support.

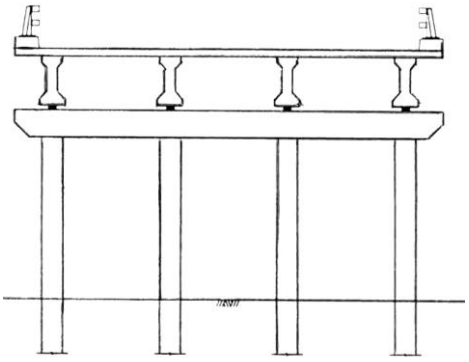

Figure 200: Trestle pier

12.5 Timber Pier

These are composed of piles, and a system of horizontal and diagonal timber walings and braces.

Figure 201: Timber pier

13. Pier Protection

Vulnerable portions of bridge substructures are often provided with protection devices intended to: -

- Deflect traffic away and/or
- Prevent the bridge being contacted by the errant vehicle.

On road bridges, the piers are often provided with comparatively low-level concrete barriers with the New Jersey traffic barrier profile. Crash cushions (refer Section 1.1) may also be used.

River crossings have piers that may be damaged by ships, and barges.

The protection fendering structures can be fabricated from concrete, timber or steel, and are often of substantial construction. These are designed to absorb very large forces, with a correspondingly large deflection at the time of impact.

13.1 Concrete Barrier

Figure 202: Concrete barrier pier protection

Figure 203: Concrete pier protection

13.2 Crash Cushion

Figure 204: Crash cushion pier protection

13.3 Steel Fendering

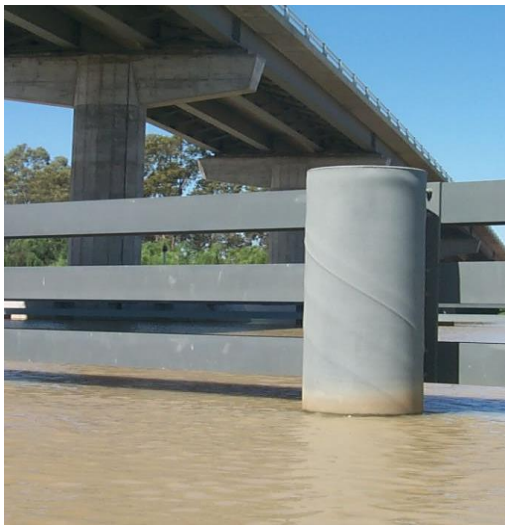

Figure 205: Steel fendering at river pier

13.4 Timber Fendering

Figure 206: Timber fendering in front of pier

14. Waterways – Channel Protection

Where erosion of the natural edges of rivers and watercourses and around constructed works can occur, scour protection measures are sometimes provided.

These treatments are intended to prevent loss of embankment or fill material during the times of high and fast water flows. Loss of material can threaten to undermine the foundations of substructures.

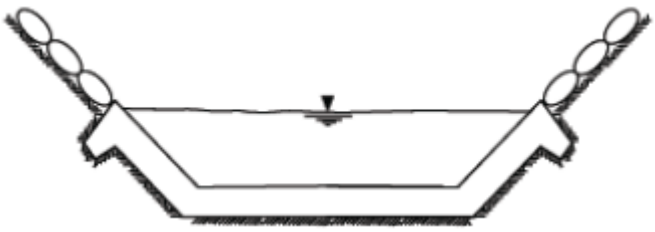

Figure 207: Reinforced concrete invert lining

Figure 208: Stone/rock or masonry invert lining

14.1 Gabions

Large size wire baskets filled with selected stone. These are able to tolerate significant deformation after placement.

Figure 209: Gabions

14.2 Reno Mattress

Wire baskets filled with selected stone forming a wide area blanket covering for soil material. These are able to tolerate significant settlement and deformation after placement.

Figure 210: Reno mattress

14.3 Large Stones

These are used to fill large or small areas. Stone often sourced locally.

Figure 211: Large stones in watercourse

15. Wingwalls

These elements retain the roadway embankment profile at the abutments

15.1 Reinforced Concrete Wingwalls

Composed of a reinforced concrete footing and main cantilever wall. The footing may be supported on piles, or on the natural sub-grade (spread footing).

Weep holes are normally provided in the wall just above natural surface level in front of wall.

Figure 212: Reinforced concrete wingwall

15.2 Reinforced Earth Wingwalls

A wall composed of interlocking facing panels (usually reinforced concrete) that are laterally restrained by steel strips embedded horizontally into the soil block. The facing panels bear on a footing below natural surface level.

Figure 213: Reinforced earth wingwall

15.3 Masonry Wingwalls

A wall composed of masonry blocks joined together using lime mortar. The wall is a gravity structure. Repair mortar must match the existing mortar type.

Figure 214: Masonry wingwall

15.4 Timber Wingwalls

These are composed of piles, walings and sheets and to retain the earth fill and sustain permanent and live loadings.

At times, tie rods are provided in the upper areas.

Figure 215: Timber wingwall

16. Base Slab

At times the watercourse floor under the bridge is provided with a concrete or stone floor to protect the foundations from scour damage.

Figure 216: Concrete floor

Figure 217: Stone floor

17. Propping

Structures can have props (or shores, struts - i.e. compression members) installed so that satisfactory structural performance is achieved for the prevailing road traffic loading.

Timber or steel is usually chosen.

The props are often installed as a short-term solution to an immediate problem, but can remain at a site for a number of years. These must be maintained in acceptable working condition.

The reasons for the presence of propping may include: -

- Insufficient load carrying capacity.
- Settlement of supporting soil
- Failure of substructure or foundation components
- Flooding/scour outcomes
- Vehicle collisions with parts of the structure – particularly piers
- Repair of structure
- Damaged or defective girders

Figure 218: Permanent propping of bridge

Figure 219: Longer term propping in culvert

(This page has been left blank intentionally)